SKIN+ACT

Serene Adjustable Electric Spa Bed with Ambient LED Light

PRODUCT MANUAL

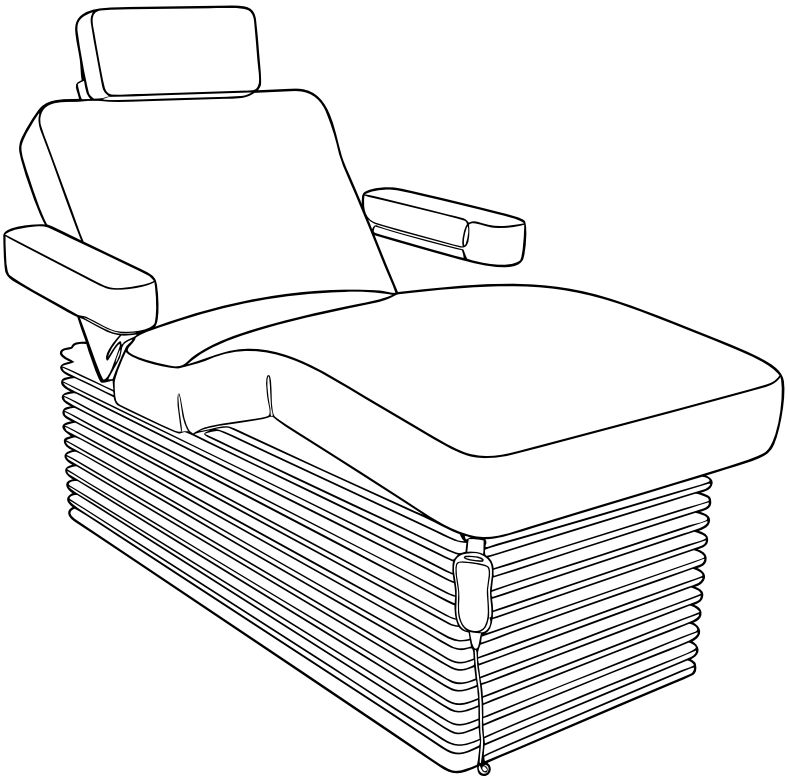

SKU258361

SKINACT.COM

TABLE OF CONTENTS

Notice & Disclaimer 3

Safety and Operating Instructions 4

Precautions 4

Important Safety Information 5

Parts Included 6

Dimensions 7

Installation 8

Remote Control Instructions 9

Bed Adjustment Guide 10

Rubber Foot Adjustment 11

Maintenance 11

Troubleshooting 12

Technical Specifications 13

Warranty Information 14

NOTICE

No part of this document may be photocopied, reproduced, or translated into any other language without prior written consent of Spa and Equipment/SkinAct.
The information in this document is subject to change without notice at any time and should not be construed as a commitment by Spa and Equipment/SkinAct.
Spa and Equipment/SkinAct assumes no responsibility for any errors that may be in this document, nor does it make any express or implied warranty with regard to this material, including, but not limited to, the implied warranties of merchantability and fitness for a particular purpose.
Spa and Equipment/SkinAct shall not be liable for incidental or consequential damages arising out of the furnishing, performance, or use of this document and the program material which it describes.

DISCLAIMER

This product is intended for professional use by trained spa, salon, esthetic, wellness, or other qualified professionals. It must be used only for its intended purpose and in accordance with all instructions, warnings, contraindications, maintenance requirements, and safety guidelines provided in this manual.
The information in this manual is for general product operation and safety reference only. It does not replace professional training, licensing requirements, medical advice, service instructions, applicable laws, or workplace safety rules. Users are responsible for proper training, safe operation, inspection, client screening when applicable, sanitation, maintenance, and compliance with all applicable regulations.
SkinAct/Spa and Equipment does not provide medical advice and does not diagnose, treat, cure, or prevent any disease, medical condition, injury, or skin disorder. Any treatment descriptions, suggested uses, or expected results are for general cosmetic and professional use reference only, and results may vary.
Before each use, inspect the product, power cord, accessories, attachments, moving parts, and related components, as applicable, for damage, looseness, contamination, instability, or abnormal operation. Do not use the product if it appears damaged, defective, improperly assembled, unsafe, or if any component is missing or malfunctioning.
The user assumes full responsibility for proper assembly, installation, operation, client selection when applicable, treatment technique when applicable, cleaning, maintenance, and storage. SkinAct/Spa and Equipment shall not be responsible for injury, property damage, treatment complications, equipment damage, loss of business, or other damages resulting from misuse, improper use, lack of training, failure to follow instructions, unauthorized repairs or modifications, improper maintenance, or use outside the intended purpose.
Do not modify, disassemble, repair, or alter this product unless authorized in writing by SkinAct/Spa and Equipment or performed by an approved service provider. Unauthorized modification, misuse, improper maintenance, or failure to follow this manual may void the warranty.
Product designs, specifications, components, accessories, images, and instructions may vary from the actual product and may be changed or updated without prior notice.
This product contains electric adjustment components and moving parts. Improper use may cause injury, pinching, equipment damage, or unsafe operation. Users are responsible for operating the table safely and following all instructions, warnings, and maintenance requirements in this manual. The user is solely responsible for confirming that use of this device is permitted under applicable state/local laws, scope-of-practice rules, licensing requirements, and workplace safety standards. This device is not intended for self-use, home use, or use by untrained individuals.

Safety and Operating Instructions

To ensure safe and proper operation of this electric treatment chair/table, please read the following instructions carefully and retain this manual for future reference.

- **Proper Setup and Grounding:**
- This electric treatment table requires a three-wire power cable and must be
- connected to a grounded three-prong power outlet. This ensures proper
- grounding, prevents accidental electric shock, and supports normal operation.
- **Avoid Water Exposure:**
- All plugs, buttons, and connecting cables must not come into contact with water or any other liquids during use.
- **Inspect for Damage:**
- Immediately discontinue use of the table if any plugs, buttons, or connecting
- cables are damaged.
- **Usage Frequency:**
- Do not operate the lifting system for more than six total minutes within any one-hour period.
- **Professional Repairs Only:**
- Repairs and maintenance must be conducted exclusively by trained and qualified professionals.

Precautions

1. **Health Restrictions:**
   - This product should not be used by individuals with osteoporosis or heart conditions.
   - Pregnant individuals should avoid using this product.
   - Those with physical injuries or skin conditions are advised not to use this product.
2. **Use by Minors and Individuals with Impaired Awareness:**
   - Children under 14 years of age and individuals with impaired consciousness must not use this product without supervision.
3. **Inspection Before Use:**
   - Inspect the power cord and plug for damage before each use. If damage is found, they must be replaced by a qualified operator or technician.
4. **Voltage Compliance:**
   - Confirm that the product is connected to the correct voltage as specified. Incorrect voltage can result in product damage.
5. **Electrical Safety:**
   - Do not handle the power plug with wet hands to prevent electric shock. Ensure the product is fully installed before powering it on.
6. **Cord Safety**:
   - Secure the power cord to prevent tripping, pulling, or damage.

7. **Cleaning**:
   - Clean the product's surface with a soft towel dampened with a neutral detergent.
8. **Unplugging When Not in Use**:
   - Always unplug the product when it is not in use.

Important:

Clients must sit only on the center seat cushion when entering, exiting, or using the chair. Do not sit, stand, lean, or place full body weight on the backrest, headrest, armrests, leg rest, foot pad, footrest extension, side edges, or outer cushion sections.

The backrest, leg rest, foot pad, headrest, and armrests are intended only to support the client during treatment. They are not designed to support full body weight during entry, exit, or repositioning.

Applying weight to unsupported areas may cause the chair to become unstable, shift, tip, or become damaged, and may result in injury.

Before adjusting the chair, make sure the client is properly positioned with body weight centered and supported. Keep hands, feet, hair, clothing, cords, towels, and loose items away from moving sections during adjustment.

Assist clients when entering or exiting the chair, especially those with limited mobility, balance concerns, injuries, or medical conditions, and those who are pregnant.

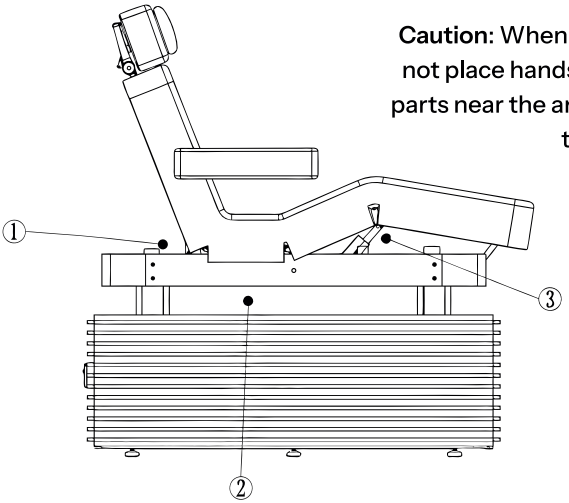

Caution: When operating any function, do not place hands, feet, head, or other body parts near the areas marked ①, ②, and ③ in the diagram.

Parts Included

Qty	Part Name	Image
1	Square Pillow	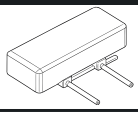
1	Face Cradle	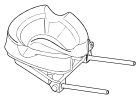
1	Small Pillow	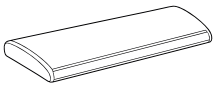
1	Left Armrest	
1	Right Armrest	

Dimensions

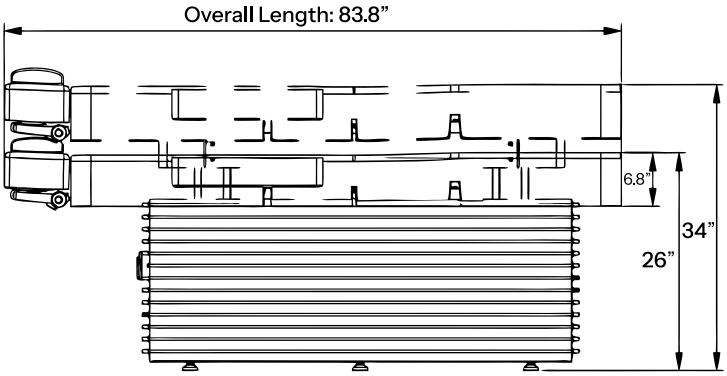

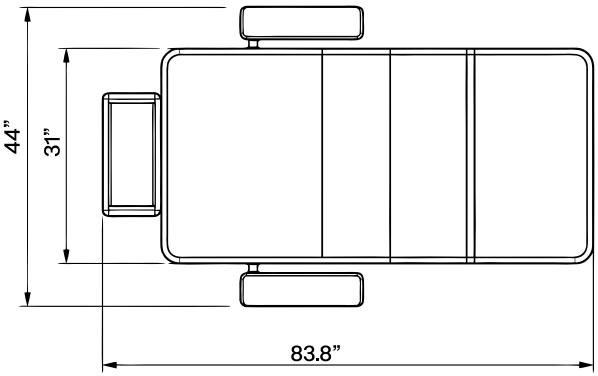

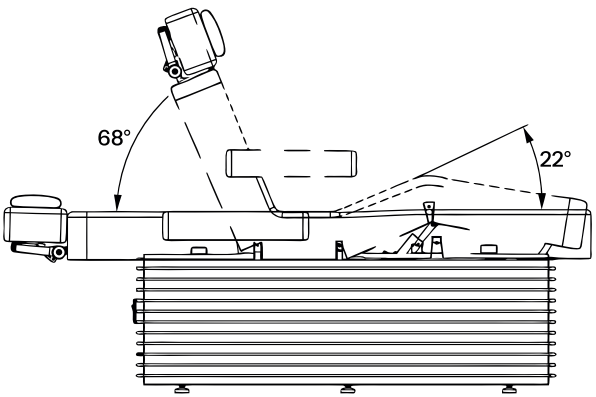

Installation

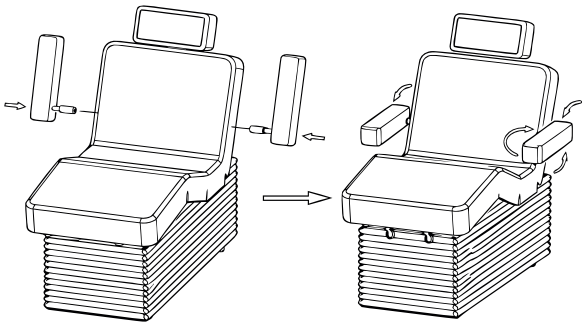

Armrest Installation

1. Align the armrest connectors with the mounting points on both sides of the chair.
2. Insert the armrest pins fully into the corresponding mounting holes.
3. Rotate each armrest 90° counterclockwise until it locks securely into place.

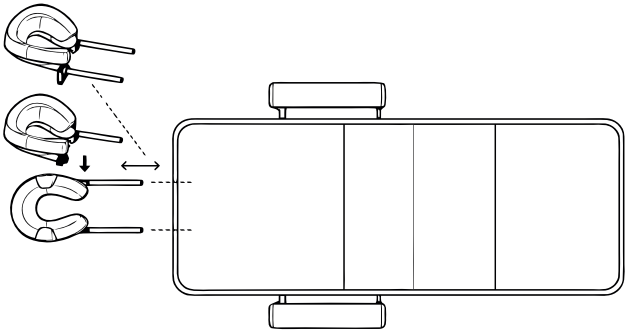

Face Cradle Installation

1. Loosen the face cradle adjustment handle.
2. Insert the two support rods into the mounting holes on the backrest.
3. Adjust the face cradle to the desired position.
4. Tighten the adjustment handle to secure the face cradle.
5. Attach the face pillow to the top of the bed.

Remote Control Instructions

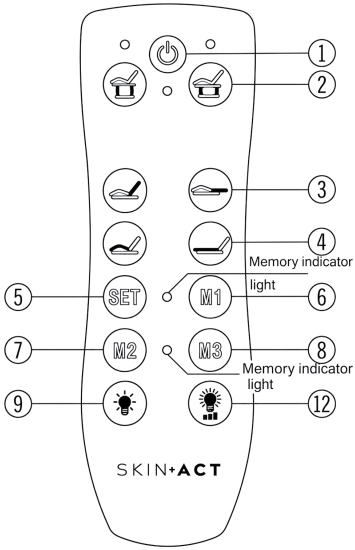

Power Control (Button ①)

- Power On: Press the power button to turn on the hand controller.
- Power Off: Press the power button again to turn off the controller. The bed will automatically return to its original position.
- Stop Auto Return: Press the power button once more to stop the automatic return.

Height Adjustment (Button ②)

- Raise Bed: Press the Up button to raise the bed.
- Lower Bed: Press the Down button to lower the bed.

Backrest Adjustment (Button ③)

- Use the adjustment buttons to raise or lower the backrest.

Leg Rest Adjustment (Button ④)

- Use the adjustment buttons to raise or lower the leg rest.

Memory Function (Buttons ⑤–⑧)

1. Press the SET button to enter memory setup mode.
2. Adjust the bed to the desired position (height, backrest, and leg rest).
3. Press and hold the SET button until the indicator light turns on.
4. Press M1, M2, or M3 to save the current position.
5. Up to three positions can be stored.

LED Control (Buttons ⑨ and ⑫)

- Press Button ⑨ to turn the LED light on or off.
- Press Button ⑫ to cycle through the available LED light settings.

Bed Adjustment Guide

Height Adjustment (Button ②)

- Press Button ② (Up) to raise the bed.
- Press Button ② (Down) to lower the bed.

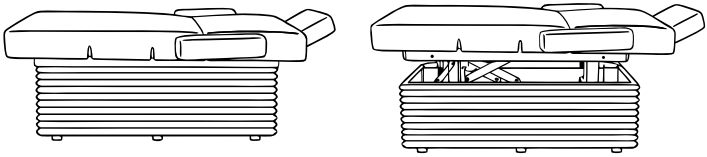

Backrest Adjustment (Button ③)

- Press Button ③ (Up) to raise the backrest.
- Press Button ③ (Down) to lower the backrest.

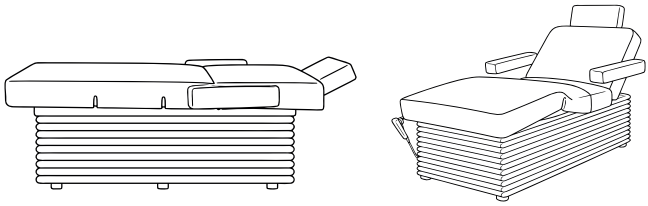

Leg Rest Adjustment (Button ④)

- Press Button ④ (Up) to raise the leg rest.
- Press Button ④ (Down) to lower the leg rest.

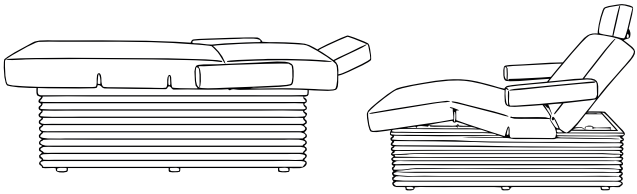

Rubber Foot Adjustment

- Rotate the rubber foot to adjust the height and stabilize the bed on uneven surfaces.
- Once adjusted, tighten the lock nut to secure the rubber foot in place.

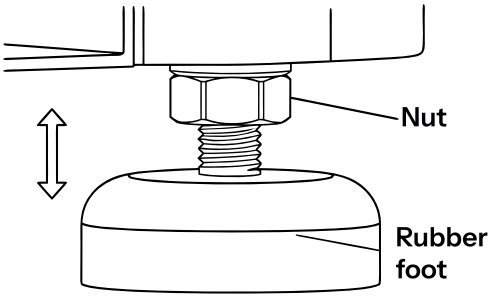

Maintenance

- When cleaning and sanitizing, do not use bleach, Barricade, or other harsh chemicals. Using harsh chemicals can damage the upholstery.
- For best results, we recommend cleaning with **SkinAct All-In-One Upholstery & Disinfecting Multi-Purpose Cleaner** (SKU24261).
- Clean and sanitize the upholstery after each treatment.
- Every six months, inspect all visible parts of the unit. If there are any abnormal noises or vibrations during operation, call Spa & Equipment/SkinAct at 1-800-418-0830.

Troubleshooting

Hand Controller Buttons Do Not Respond

Solution: Check that the controller power switch is turned on. Make sure the power cord is securely plugged in and all cables are properly connected. If the selected adjustment has reached its limit, press another adjustment button or the button for the opposite direction.

Noise or Shaking During Lifting or Lowering

Solution: Check for loose screws or hardware around the lifting mechanism and moving parts. Tighten all screws securely. If the noise or shaking continues, stop using the bed and contact SkinAct/Spa & Equipment for assistance.

Power Switch Indicator Light Does Not Turn On

Solution: Check that the power cord is securely connected. If the indicator light still does not turn on, the fuse may need to be replaced. Replace the fuse with one of the same type and rating. Disconnect the power cord before inspecting or replacing the fuse. Fuse replacement should only be performed by a qualified technician or authorized service provider.

Technical Specifications

Product Name:	Serene Adjustable Electric Spa Bed with Ambient LED Light
Voltage:	AC 100-130 V / 220-240 V
Frequency:	50/60 Hz
Power Consumption:	160 W
Backrest Angle:	68°
Leg Rest Angle:	22°
Height Range:	26”- 34”
Width with Armrests	44”
Width without Armrests	31”
Base Dimensions (L x W x H):	59” x 25” x 19.5”
Net Weight:	349 lbs
Weight Capacity:	440 lbs

Warranty Information

The manufacturer/warrantor warrants to the original purchaser that this product will be free from defects in materials and workmanship under normal and proper use for a period of one (1) year from the original date of purchase, unless otherwise stated in writing for a specific product.

This limited warranty applies only to the original purchaser and is not transferable. Proof of purchase may be required to obtain warranty service.

This warranty covers parts and labor required to correct defects in materials or workmanship during the warranty period. At the warrantor's discretion, the product may be repaired, replaced, or substituted with a comparable item or component.

This warranty does not cover damage or defects caused by misuse, abuse, improper assembly, improper installation, unauthorized modification, unauthorized repair, neglect, accident, improper cleaning, use of harsh chemicals, power surges, water or liquid damage, use outside the intended purpose, failure to follow the product manual, or use with parts/accessories not approved by SkinAct.

This warranty does not cover normal wear and tear, cosmetic damage, upholstery wear, stains, discoloration, scratches, dents, wheels/casters, bulbs, glass parts, filters, tips, probes, disposable parts, consumables, or accessories subject to regular replacement unless the defect is determined to be due to a manufacturing issue.

The warrantor shall not be liable for loss of use, loss of time, loss of business, lost revenue, inconvenience, or any indirect, incidental, special, or consequential damages arising from the use of this product or from any defect covered by this warranty.

To request warranty service, contact the dealer or SkinAct customer support. If return service is required, the purchaser may be asked to return the product or the affected component for inspection. The purchaser is responsible for properly packaging the item and prepaying all shipping costs to send the item in for warranty service. If the issue is covered under warranty, repair or replacement will be performed at no charge, subject to the terms of this limited warranty.

This warranty does not cover damage, contamination, upholstery damage, sanitation-related issues, injury claims, or equipment issues resulting from improper cleaning, improper maintenance, misuse, use by untrained users, or use outside applicable safety guidelines.

This limited warranty is the only written or express warranty provided by the warrantor. No employee, representative, dealer, or third party is authorized to modify or extend this warranty unless confirmed in writing by SkinAct. This warranty gives you specific legal rights, and you may also have other rights, which vary by state or province.

SKIN+ACT

Phone: 1-800-418-0830

Email: info@skinact.com

Website: www.skinact.com