SKIN+ACT

Malibu Professional Electric Treatment Chair/Table (With Swivel)

PRODUCT MANUAL



SKU182201

SKINACT.COM

TABLE OF CONTENTS

Notice & Disclaimer 3
Warnings 4
Stability and Rotation Safety 5
Safety and Operating Instructions 6
Precautions 6
Dimensions & Angle Specifications 7
Installation 8
Structure of Treatment Table 8
Remote Control Instructions 9
Built-In Unit Controls 10
Operation Cautions 11
How to Tighten the Brake Block 12
Maintenance 13
Intended Use 13
Troubleshooting 14
Symbols & Safety Labels 15
Specifications 16–17
Storage and Transportation Conditions 17
Circuit System Connection Diagram 17
EMC Guidance 18
Warranty Information 19

NOTICE

No part of this document may be photocopied, reproduced, or translated into any other language without prior written consent of Spa and Equipment/SkinAct.
The information in this document is subject to change without notice at any time and should not be construed as a commitment by Spa and Equipment/SkinAct.
Spa and Equipment/SkinAct assumes no responsibility for any errors that may be in this document, nor does it make any express or implied warranty with regard to this material, including, but not limited to, the implied warranties of merchantability and fitness for a particular purpose.
Spa and Equipment/SkinAct shall not be liable for incidental or consequential damages arising out of the furnishing, performance, or use of this document and the program material which it describes.

DISCLAIMER

This product is intended for professional use by trained spa, salon, esthetic, wellness, or other qualified professionals. It must be used only for its intended purpose and in accordance with all instructions, warnings, contraindications, maintenance requirements, and safety guidelines provided in this manual.
The information in this manual is for general product operation and safety reference only. It does not replace professional training, licensing requirements, medical advice, service instructions, applicable laws, or workplace safety rules. Users are responsible for proper training, safe operation, inspection, client screening when applicable, sanitation, maintenance, and compliance with all applicable regulations.
SkinAct/Spa and Equipment does not provide medical advice and does not diagnose, treat, cure, or prevent any disease, medical condition, injury, or skin disorder. Any treatment descriptions, suggested uses, or expected results are for general cosmetic and professional use reference only, and results may vary.
Before each use, inspect the product, power cord, accessories, attachments, moving parts, and related components, as applicable, for damage, looseness, contamination, instability, or abnormal operation. Do not use the product if it appears damaged, defective, improperly assembled, unsafe, or if any component is missing or malfunctioning.
The user assumes full responsibility for proper assembly, installation, operation, client selection when applicable, treatment technique when applicable, cleaning, maintenance, and storage. SkinAct/Spa and Equipment shall not be responsible for injury, property damage, treatment complications, equipment damage, loss of business, or other damages resulting from misuse, improper use, lack of training, failure to follow instructions, unauthorized repairs or modifications, improper maintenance, or use outside the intended purpose.
Do not modify, disassemble, repair, or alter this product unless authorized in writing by SkinAct/Spa and Equipment or performed by an approved service provider. Unauthorized modification, misuse, improper maintenance, or failure to follow this manual may void the warranty.
Product designs, specifications, components, accessories, images, and instructions may vary from the actual product and may be changed or updated without prior notice.
This product contains electric adjustment components and moving parts. Improper use may cause injury, pinching, equipment damage, or unsafe operation. Users are responsible for operating the table safely and following all instructions, warnings, and maintenance requirements in this manual. The user is solely responsible for confirming that use of this device is permitted under applicable state/local laws, scope-of-practice rules, licensing requirements, and workplace safety standards. This device is not intended for self-use, home use, or use by untrained individuals.

Warnings

- Disconnect the power supply before replacing electrical components or performing maintenance or cleaning.
- Connect the power cord only to a properly installed and grounded electrical outlet to reduce the risk of fire and electric shock.
- Do not stand on the equipment.
- Keep this equipment out of the reach of children. Do not allow children to play with or operate the equipment. When leaving the equipment unattended, raise the backrest to its highest position.
- Do not use or store the equipment in wet or damp environments, such as bathrooms, as this may result in electric shock or equipment failure. Keep the hand controller and foot controller away from water.
- Do not operate the equipment near flammable paints, coatings, gases, or in oxygen-enriched environments.
- This equipment is not intended for use by persons (including children) with reduced physical, sensory, or mental capabilities, or by individuals lacking sufficient experience or knowledge, unless they are supervised or instructed by a person responsible for their safety.
- If the power cord is damaged, discontinue use immediately and contact your SkinAct distributor, authorized service center, or a qualified service technician for repair or replacement.
- Before operating the chair, ensure that no objects or body parts are within the range of movement of any moving components.
- This equipment must be operated only by trained professionals.
- Do not service or perform maintenance on the equipment while it is in use by a patient.
- Do not use portable RF (radio frequency) transmitters or other electromagnetic transmitting devices near this equipment.
- Read and follow the Electromagnetic Compatibility (EMC) Information provided in this manual.
- Position the equipment so that the power cord and disconnect device remain easily accessible at all times.
- The third conductor in the power cord is the protective grounding conductor and must not be removed or modified.
- Maximum patient weight: 440 lb (200 kg). Exceeding this weight limit may result in equipment damage or personal injury.
- If the user or patient becomes aware of a serious incident involving this equipment, report it to the appropriate regulatory authority and to SkinAct as soon as possible.
- Dispose of the equipment and its accessories in accordance with applicable local regulations at the end of their service life.
- Do not modify this equipment. Unauthorized modifications may affect safety and performance.
- This equipment is intended for operation by licensed medical or aesthetic professionals. Patients should not operate the equipment themselves.
- The patient should remain aware of their surroundings during treatment and should always be supervised by the operator.
- This product is upholstered with artificial leather. If you experience an allergic reaction to the upholstery material, discontinue use immediately.
- During operation, the surface temperature of the hand controller, button panel, and metal frame may reach 106°F (41°C) but will not exceed 113°F (45°C). Patients should not remain in contact with these surfaces for extended periods (contact time should be less than 1 minute).
- For indoor use only.

Stability and Rotation Safety

When operating a hydraulic rotating chair or single-post electric treatment table, the operator is responsible for maintaining stability and ensuring client safety. Always follow the instructions provided for the specific model.

To ensure stability

1. Place the chair or table on a level, dry, and non-slip surface. Adjust the leveling feet, if equipped, so the base remains stable and does not rock.
2. Inspect the base, controls, adjustment mechanisms, and fasteners before each use. Do not operate the unit if any component is loose, damaged, or functioning improperly.
3. Keep the client's weight centered over the base. Position the chair or tabletop in line with the base whenever possible, particularly during treatment.
4. Do not allow anyone to sit, stand, lean, or place excessive weight on the headrest, backrest, leg rest, foot section, or armrests.
5. Whenever possible, rotate or reposition the unit before the client enters it. Do not rotate or adjust the unit while the client is entering or exiting.
6. If rotation is necessary while occupied, place the client in a stable upright position, keep the client centered, support the chair or table securely, and rotate it slowly.
7. Keep hands, feet, clothing, cords, and other objects away from moving parts and potential pinch points during rotation or adjustment.
8. Ensure all rotation locks and adjustable sections are securely engaged before beginning treatment.
9. Do not exceed the stated weight capacity or apply sudden, concentrated, or excessive downward pressure. These products are not intended for massage or procedures that require substantial downward force.
10. Do not leave a client unattended while the unit is elevated, reclined, rotating, or being adjusted.
11. Stop using the unit immediately if it becomes unstable, shifts unexpectedly, makes unusual sounds, or fails to hold its selected position.



Warning: Do Not Sit or Apply Excess Force
Do not sit, stand, jump, or place excessive weight on the backrest or footrest. Doing so may cause the product to tip, damage the backrest/footrest joints, or result in injury.

30%	55%	15%	
Back Cushion	Seat Cushion	Leg Cushion	

Safety and Operating Instructions

To ensure safe and proper operation of this electric treatment table, please read the following instructions carefully and retain this manual for future reference.

- **Proper Setup and Grounding:**

This electric treatment table is equipped with a three-prong power cord and must be connected to a properly grounded three-prong outlet. Proper grounding helps reduce the risk of electric shock.

- **Avoid Water Exposure:**

Keep all plugs, controls, power cords, and connecting cables away from water and other liquids.

- **Inspect for Damage:**

Immediately discontinue use if the plug, controls, power cord, or connecting cables are damaged.

- **Usage Frequency:**

Do not operate the electric actuator continuously for more than 2 minutes. Allow it to rest for at least 18 minutes before operating it again.

- **Professional Repairs Only:**

Repairs and maintenance must be conducted exclusively by trained and qualified professionals.

Precautions

1. **Health Restrictions:**
   - This product should not be used by individuals with osteoporosis or heart conditions.
   - Pregnant individuals should avoid using this product.
   - Individuals with injuries or skin conditions should not use this product.
2. **Use by Minors and Individuals with Impaired Awareness:**
   - Children under 14 years of age and individuals with impaired consciousness must not use this product without supervision.
3. **Inspection Before Use:**
   - Inspect the power cord and plug for damage before each use. If damage is found, discontinue use and have the damaged component replaced by a qualified technician or authorized service provider.
4. **Voltage Compliance:**
   - Confirm that the product is connected to the correct voltage as specified. Incorrect voltage can result in product damage.
5. **Electrical Safety:**
   - Do not handle the power plug with wet hands to prevent electric shock.
   - Ensure the product is properly installed before powering it on or operating it.
6. **Securing the Power Cord:**
   - Secure the power cord to prevent tripping, pulling, or damage.

7. **Cleaning:**
   - Clean the product's surface with a soft towel dampened with neutral detergent.
8. **Unplugging When Not in Use:**
   - Always unplug the product when it is not in use.

Dimensions & Angle Specifications

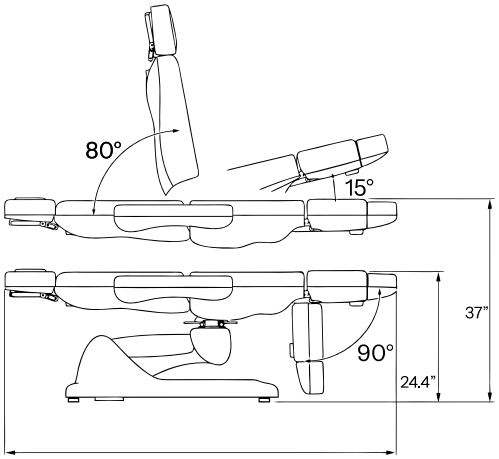

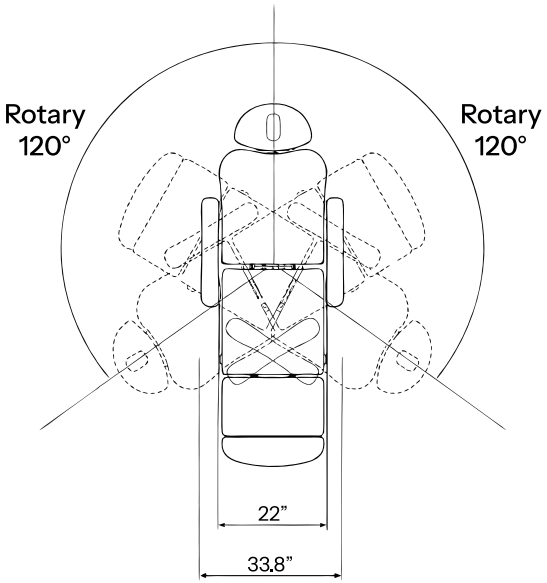

Installation

1. Place the product in the desired location according to the overall room layout, lighting, and operating requirements of the salon, spa, or treatment room. Keep the unit in a clean, dry, and cool environment.
2. Open the packaging and check that the product is intact. Confirm that all included accessories and spare parts are complete. Contact the distributor if anything is missing or damaged.
3. Position the product on a firm, flat, and stable surface. Make sure the unit is placed securely before use. If the product rocks or does not sit evenly, adjust its placement until it is stable.
4. Connect the power plug to the proper power supply as shown in the reference image.
5. Disconnect the plug from the main power supply before moving or servicing the product.

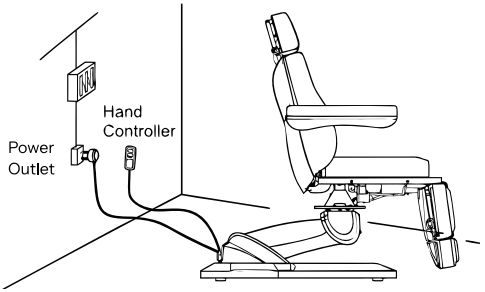

Structure of Treatment Table

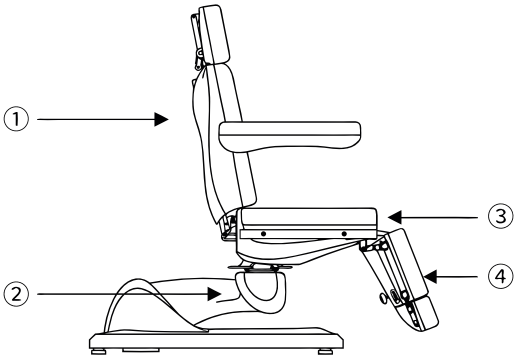

① Angle adjustment of the backrest

② Lifting adjustment

③ Angle adjustment of the seat

④ Angle adjustment of the footrest

Remote Control Instructions

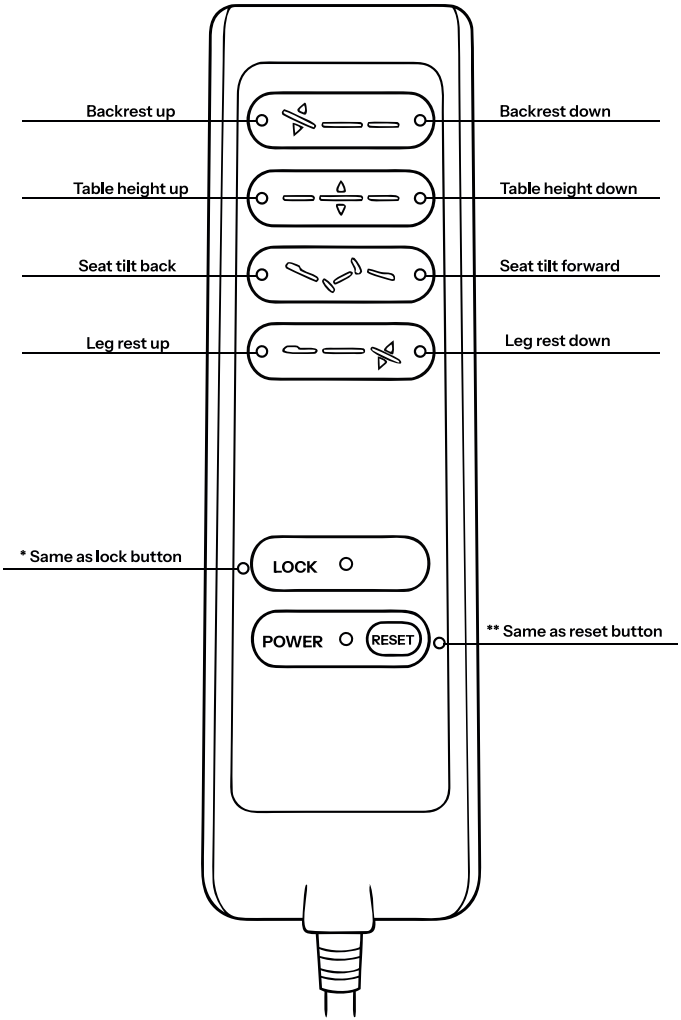

* Press and hold the lock button for 3 seconds. All motors and movement controls will be disabled. Press and hold the lock button again to unlock the motors.

** The reset button automatically returns the unit to the seated chair position and lowest height. It is recommended the chair be in this position when a client gets on or off the chair.

Built-In Unit Controls

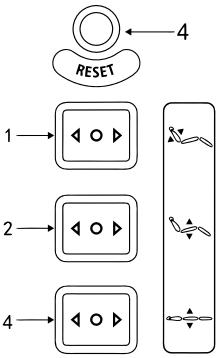

1. Backrest Up & Down ↑↓
2. Seat Tilts Backward and Returns to Horizontal →←
3. Table Height Up and Down ↑↓
4. Reset Position

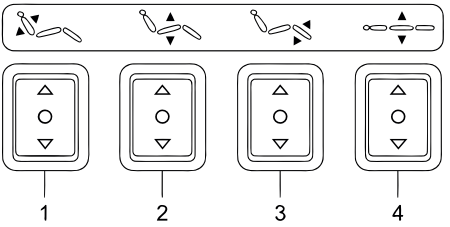

1. Backrest Up & Down ↑ ↓
2. Seat Tilts Backward and Returns to Horizontal → ←
3. Leg Rest Up & Down ↑ ↓
4. Table Height Up and Down ↑ ↓

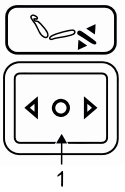

1. Leg Rest Up & Down ↑↓

Operation Cautions

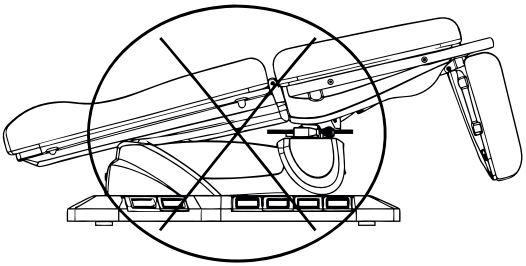

Do not tilt the seat cushion while the chair is in its lowest position.

Warning: Do Not Sit or Apply Excess Force
Do not sit, stand, jump, or place excessive weight on the backrest or footrest. Doing so may cause the product to tip, damage the backrest/footrest joints, or result in injury.

If the headrest support rod becomes loose, follow the illustrated steps to secure it.

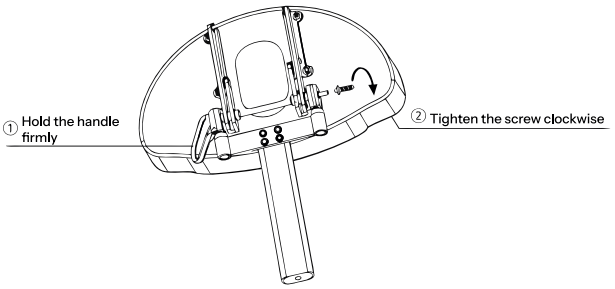

How to Tighten the Brake Block

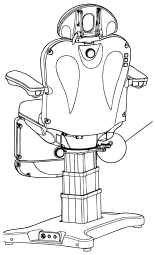

The brake block is located underneath the seat of the treatment chair/table on the right side.

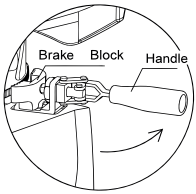

1. Raise the backrest to its highest position. Then, release the locking block by pushing the handle in the counterclockwise direction, as shown in the image above.

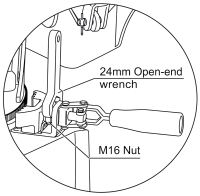

2. Hold the handle securely with your right hand. While holding the handle in place, use an open-end wrench to loosen the M16 nut by turning it clockwise.

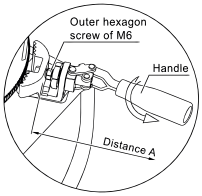

3. Hold the M6 hexagon screw with your left hand to prevent it from rotating. At the same time, rotate the handle 360° counterclockwise with your right hand to increase the clearance.

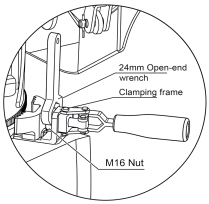

4. Keep the clamping frame level by holding the handle with your right hand. While holding it in place, use an open-end wrench to tighten the M16 nut by turning it counterclockwise.

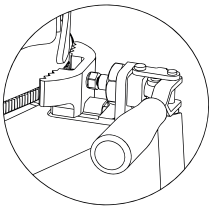

5. Tighten the handle by turning it clockwise, as shown in the image.

Maintenance

- When cleaning and sanitizing, do not use bleach, Barbicide, or other harsh chemicals. Using harsh chemicals can damage the upholstery.
- For best results, clean with **SkinAct All-In-One Upholstery & Disinfecting Multi-Purpose Cleaner** (SKU24261).
- Clean and sanitize the upholstery after each treatment.
- Every six months, visually inspect all visible parts of the unit. If there are any abnormal noises or vibrations during operation, call Spa & Equipment/SkinAct at 1-800-418-0830.

Intended Use

- This product is intended for use in medical facilities, nursing homes, rehabilitation centers, medical spas, and aesthetic clinics.
- The chair is designed to support patients in multiple positions during examinations, treatments, and other clinical or aesthetic procedures performed by trained healthcare or aesthetic professionals.
- **Protection Against Electric Shock:** Class II equipment with functional earth
- **Applied Part:** Upholstered Patient Support Surface
- Contraindications: Do not use the chair when a medical condition, injury, pregnancy, impaired awareness, or other circumstance makes positioning or movement unsafe. Consult an appropriate healthcare professional when necessary.

Troubleshooting

Motorized Sections Do Not Move

Solution: Confirm that the hand or foot remote is securely connected and responding properly. If the remote does not respond, replace the remote or contact SkinAct/Spa & Equipment technical support for assistance.

Hand or Foot Controller Not Working

Solution: Check that the controller is securely connected. If it remains unresponsive, replace the controller or contact SkinAct/Spa & Equipment.

Control Box or Motor Connection Issue

Solution: If the motorized sections do not move after confirming the remote and power connection, discontinue use and contact Spa & Equipment/ SkinAct.

Abnormal Noise During Operation

Solution: Apply lubricating oil to rotating or moving parts such as hinges, lift areas, or footrest joints. If the noise continues after lubrication, stop using the product and contact SkinAct/Spa & Equipment.

Motor Performance Issue

Solution: If the motor operates irregularly, makes unusual noises, or fails to move smoothly, discontinue use and contact Spa & Equipment/SkinAct.

Specifications

Product Name:	Malibu Electric Medical Spa Treatment Chair/Table (With Swivel)
Voltage:	100–120 V AC
Frequency:	50/60 Hz
Power Consumption:	300 VA (MAX)
Backrest Angle:	0° flat to 80° incline
Leg Rest Angle:	0° flat to 90° decline
Height Range:	24.4"–37"
Seat Tilt Angle:	15°
Rotation:	240° (120° to the left, 120° to the right)
Base Dimensions (L × W):	40" × 31"
Weight Capacity:	440 lb (200 kg)
Net Weight:	240 lb (108 kg)
Operating Temperature:	32°F–104°F (0°C–40°C)
Operating Atmospheric Pressure:	70–106 kPa
Relative Humidity:	30%–90%

Symbols & Safety Labels

 Refer to instruction manual	 Manufacturer
 WEEE	CE
 Date of Manufacture	 Type B Applied Part
 Warning	 Serial No.
 Operating Atmospheric Pressure	 Temperature Limit
 Keep dry / Protect from Rain	 Fragile, handle with care
 Humidity Limits	 Maximum Stacking Load: 250 kg
 Keep away from sunlight	 Do Not Roll or Tumble
 This Side Up	 Handle with Care
 = kg Maximum Patient Weight	 Class II equipment
 E525626 UL Mark	 Warning: Hand Crush Hazard
 Warning: Mechanical Injury Hazard	 Do Not Sit

Specifications

Storage and Transportation Conditions

- Temperature: 23°F to 131°F
- Relative humidity: 80% or less
- Atmospheric pressure: 70-106 kPa

The maximum weight capacity of the chair is 440 lb (200 kg). Exceeding this limit may result in equipment damage or personal injury.

30%	55%	15%	= 200kg
Head Cushion	Seat Cushion	Leg Cushion	

Circuit System Connection Diagram

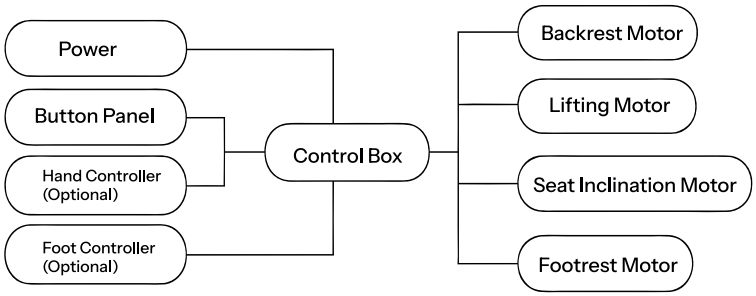

Indicates the software version: C-013B-01 V.1.0

EMC Guidance

Warning:

- Do not use this equipment near active high-frequency (HF) surgical equipment or inside the RF-shielded room of a magnetic resonance imaging (MRI) system, where electromagnetic interference may be high.
- Use only accessories, transducers, and cables specified or supplied by SkinAct. Using unauthorized accessories or cables may increase electromagnetic emissions, reduce electromagnetic immunity, and result in improper operation.
- Avoid using this equipment adjacent to or stacked with other equipment, as improper operation may result. If such use is necessary, observe this equipment and the other equipment to verify that they are operating normally.
- Portable RF communications equipment (including wireless transmitters, antennas, antenna cables, and external antennas) should be kept at least 12 inches (30 cm) away from any part of this equipment, including cables specified by the manufacturer. Failure to maintain this separation distance may result in degraded performance.

Guidance and Manufacturer's Declaration – Electromagnetic Emissions

Emissions Test:	Compliance
RF emissions CISPR 11	Group 1
RF emissions CISPR 11	Class A
Harmonic emissions IEC 61000-3-2	Class A
Voltage fluctuations/flicker emissions IEC 61000-3-3	Complies

Warranty Information

The manufacturer/warrantor warrants to the original purchaser that this product will be free from defects in materials and workmanship under normal and proper use for a period of one (1) year from the original date of purchase, unless otherwise stated in writing for a specific product.

This limited warranty applies only to the original purchaser and is not transferable. Proof of purchase may be required to obtain warranty service.

This warranty covers parts and labor required to correct defects in materials or workmanship during the warranty period. At the warrantor's discretion, the product may be repaired, replaced, or substituted with a comparable item or component.

This warranty does not cover damage or defects caused by misuse, abuse, improper assembly, improper installation, unauthorized modification, unauthorized repair, neglect, accident, improper cleaning, use of harsh chemicals, power surges, water or liquid damage, use outside the intended purpose, failure to follow the product manual, or use with parts/accessories not approved by SkinAct.

This warranty does not cover normal wear and tear, cosmetic damage, upholstery wear, stains, discoloration, scratches, dents, wheels/casters, bulbs, glass parts, filters, tips, probes, disposable parts, consumables, or accessories subject to regular replacement unless the defect is determined to be due to a manufacturing issue.

The warrantor shall not be liable for loss of use, loss of time, loss of business, lost revenue, inconvenience, or any indirect, incidental, special, or consequential damages arising from the use of this product or from any defect covered by this warranty.

To request warranty service, contact the dealer or SkinAct customer support. If return service is required, the purchaser may be asked to return the product or the affected component for inspection. The purchaser is responsible for properly packaging the item and prepaying all shipping costs to send the item in for warranty service. If the issue is covered under warranty, repair or replacement will be performed at no charge, subject to the terms of this limited warranty.

The warranty does not cover damage, contamination, upholstery damage, sanitation-related issues, injury claims, or equipment issues resulting from improper cleaning, improper maintenance, misuse, use by untrained users, or use outside applicable safety guidelines.

This limited warranty is the only written or express warranty provided by the warrantor. No employee, representative, dealer, or third party is authorized to modify or extend this warranty unless confirmed in writing by SkinAct. This warranty gives you specific legal rights, and you may also have other rights, which vary by state or province.

SKIN+ACT

Phone: 1-800-418-0830

Email: info@skinact.com

Website: www.skinact.com