Pro 12 Function Skin Care System (SKU16505)



SKIN+ACT

Toll Free: 1.800.418.0830	www.skinact.com www.spaandequipment.com	International: 818.834.6640

Copyright © 2025 Spa and Equipment, All Rights Reserved

NOTICE

No part of this document may be photocopied, reproduced, or translated into any other language without prior written consent of Spa and Equipment/SkinAct.

The information in this document is subject to change without notice at any time and should not be construed as a commitment by Spa and Equipment/SkinAct.

Spa and Equipment/SkinAct assumes no responsibility for any errors that may be in this document, nor does it make expressed or implied warranty with regard to this material, including, but not limited to, the implied warranties of merchantability and fitness for a particular purpose.

Spa and Equipment/SkinAct shall not be liable for incidental or consequential damages arising out of the furnishing, performance, or use of this document and the program material which it describes.

SKIN+ACT

Function

The M-2020A integrates multiple beauty treatments in one device:

- Herbal facial vapor
- High frequency
- Induct nourishment and impurity elimination
- Skin vibration and facial cleansing
- Diamond skin vibration
- Blackhead removal and spray moisturizing
- Ultrasonic treatment
- Magnifying lamp
- Heated towel box
- Hot and cold massage hammer
- Ultrasonic beauty functions

Operating Guide

Before use, assemble the device correctly and connect each function head to its designated socket.

Control panel functions:

1.Time displayer

2.Time decrease key

3.Vacuum & spray socket

4.Time increase key

5.Vacuum & spray adjustment key

6.Spray function socket

7.Spray function key

8.Power reduction key

9.Induct socket

10.Power increase key

11.Derivation socket

12.Galvanic output socket

13.Left output socket

14.Ultrasonic socket

15.Right output socket

16.Frequency socket

17.Frequency function key

18.Skin vibration socket (left)

19.Skin vibration socket (right)

20.Power start/pause key

21.Vacuum & spray displayer

22.Power displayer

23.Left output displayer

24.Right output displayer

25.Galvanic function key

26.Wave output socket

27.Pulse wave key

28.Continuous wave key

29.Ultrasonic displayer

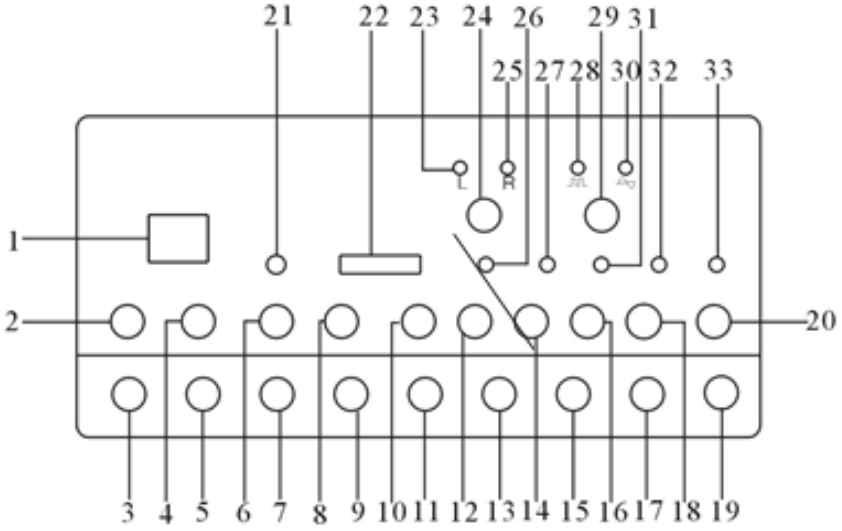

Synthesize host front-panel diagram

42. Sprayer power displayer.
43. Sprayer water inlet.

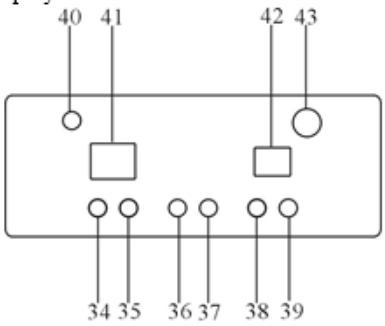

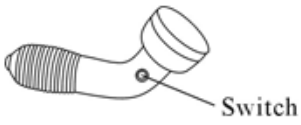

30.Skin vibration displayer

31.Frequency displayer

32.Time displayer

33.Sprayer power switch

34.Sprayer power displayer

35.Sprayer timer

36.Total power switch

37.UV light key

38.Time subtract key

39.Power decrease key

40.Spray angle regulator

41.Spray time displayer

42.Sprayer power displayer

43.Sprayer water inlet

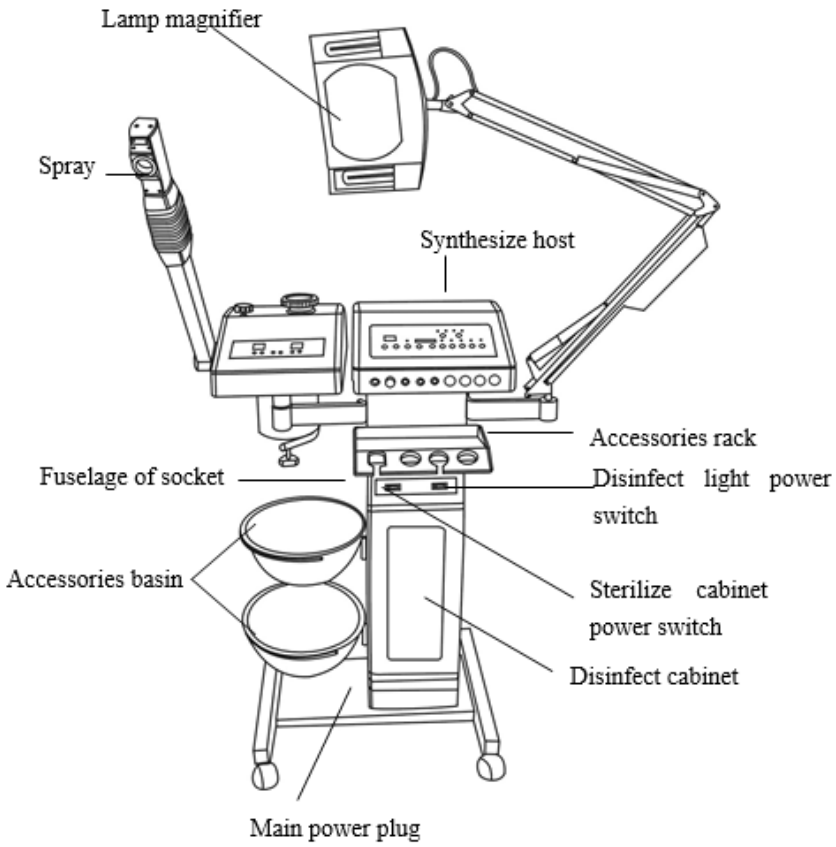

Functions & Operating Steps

A. Facial Vapor

1.Connect sprayer host plug to socket.

2.Add clean water via inlet (43).

3.Turn on the main power switch (36).

4.Set timer (up to 30 mins) and adjust spray angle (40).

5.Press sprayer power key (37).

6.For UV sterilization, press UV key (37).

B. Herbal Medicine on Sprayer

Same as facial vapor but fill container with herbal solution or fragrance oil.

C. High-Frequency Therapy

1.Insert glass electrode into socket (17).

2.Switch on main power.

3.Adjust time with time key (2)/(4) and intensity with power keys (8)/(10).

4.Turn off power after use and clean electrode.

Caution: Do not use on clients with pacemakers, pregnant women, or near metal implants.

D. Induct Nourishment & Impurity Elimination

1.Connect galvanic accessories into socket (11).

2.Set timer and adjust strength (8)/(10).

3.After use, turn off power and clean accessories.

E. Skin Vibration & Cleaning

1.Connect vibration brush to socket (18).

2.Switch on, set timer (2)/(4), and adjust speed (8)/(10).

3.Turn off power after treatment and clean brush.

F. Spray Moisturizing

1.Connect sprayer wand to socket (19).

2.Fill bottle with distilled water or toner.

3.Switch on, set timer, and spray evenly.

G. Wood's Lamp

1.Connect plug into socket.

2.Switch on to analyze skin under violet light.

3.Turn off after use.

H. Cold Light Magnifier

1.Connect plug into socket.

2.Switch on to use magnifier with light.

3.Turn off after use.

I. Heated Towel Box

1.Place towels into cabinet.

2.Close door and switch on power.

3.Allows towel warming, preservation, and disinfection.

4.Turn off after use.

J. Ultrasonic Treatment

1.Connect ultrasonic handle to socket (13/15).

2.Switch on power, press ultrasonic key (14).

3.Adjust timer (2)/(4) and intensity (8)/(10).

4.Select continuous or pulse wave with keys (28)/(29).

5.After treatment, turn off power and disinfect handle.

Warning:

•Do not touch ultrasonic bar immediately after use (risk of burns).

•Always disinfect equipment after use.

K. Diamond Blackhead Removal

1.Attach diamond head and connect vacuum.

2.Switch on, set timer, and adjust intensity.

3.Move diamond tip gently across treatment area.

4.After use, clean filter and attachments.

Safety Cautions

1.Device has been tested and inspected. If malfunction occurs, contact a qualified technician.

2.For professional esthetic use only.

3.Always follow instructions. The company is not responsible for misuse.

4.Not suitable for children or individuals with weak constitution, slow reaction, or mental illness unless supervised.

5.Children must not play with the device.

Dimensions:

39"H x 30"W x 22"D

Weight: 85 lbs