Elite Digital Facial Ozone Steamer

User Manual



SKIN+ACT

www.skinact.com | www.spaandequipment.com

Toll Free: 1.800.418.0830

Copyright © 2025 SkinAct, All Rights Reserved

NOTICE

No part of this document may be photocopied, reproduced, or translated into any other language without prior written consent of SkinAct.

The information in this document is subject to change without notice at any time and should not be construed as a commitment by SkinAct. SkinAct assumes no responsibility for any errors that may be in this document, nor does it make expressed or implied warranty with regard to this material, including, but not limited to, the implied warranties of merchantability and fitness for a particular purpose.

SkinAct shall not be liable for incidental or consequential damages arising out of the furnishing, performance, or use of this document and the program material which it describes.

SKIN+ACT

www.skinact.com | www.spaandequipment.com

Toll Free: 1.800.418.0830

Measurements

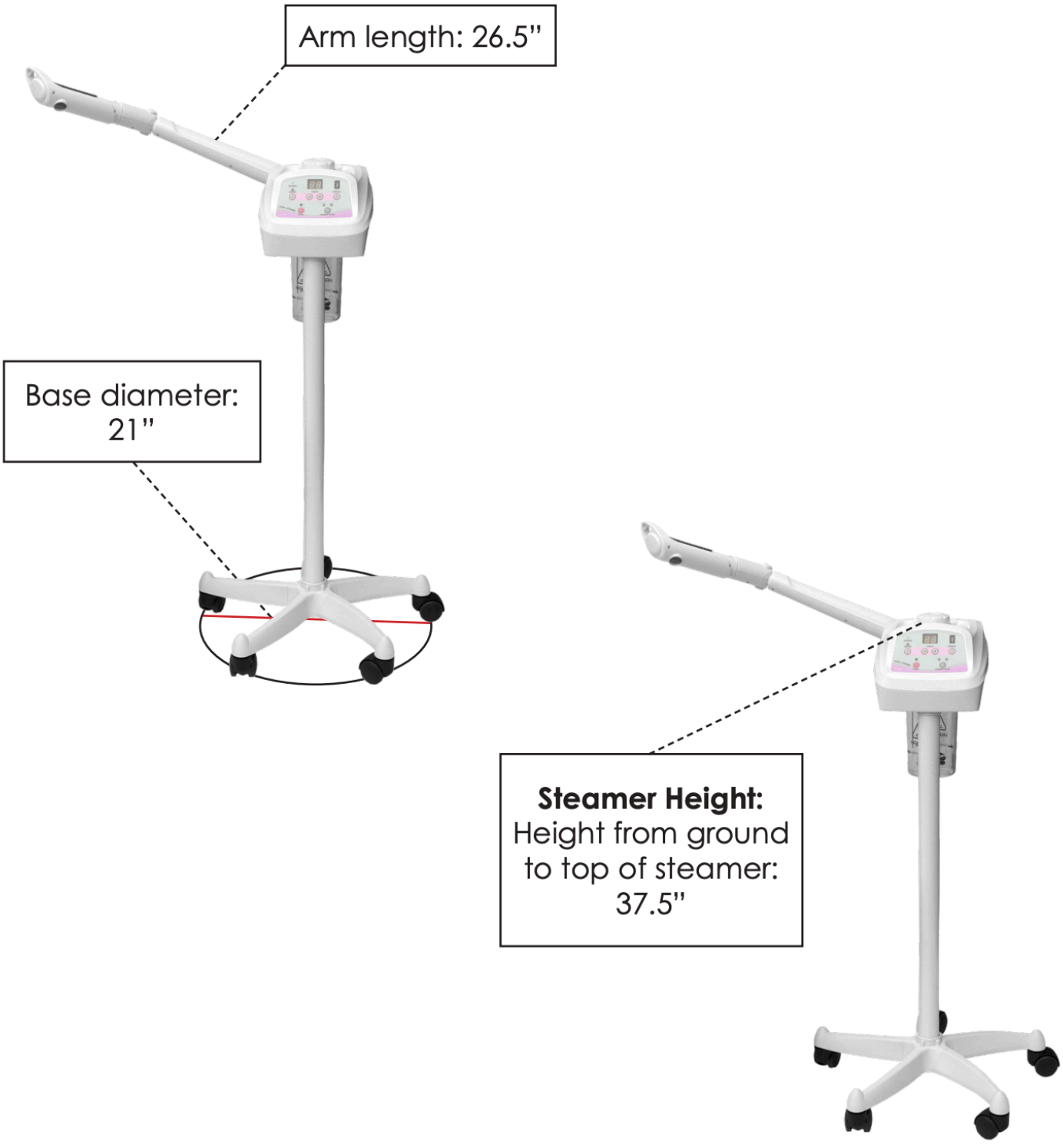

●Product Feature

New appearance, stainless steel setting base, built-in ultraviolet strip lamp, threaded water cup setting and flush bonding airproof ring design, avoid water and gas leakage greatly. Spray arm with special design for wide range of application, the spray head can be adjusting 60 degree by forward-backward direction. But also, micro-computer control, third gear mist setting, automatically monitor water level. This machine owns automatically monitor warning system of ultimate high-low water level, in case low water level to harm the heating groups or cause the spray water hidden trouble due to too high water level. Meanwhile, eliminate the safe trouble caused by the steamer turn on without water.

●Function:

1) Soften the dead cells on the surface skin for the next cleaning treatment.
2) Stretch skin pore for deep cleaning.
3) Permeate into the skin pore, Soften the cumulated oil dirt, blackhead, cosmetic remain and dirt, which make the next cleansing treatment more efficient.
4) Help the skin pore to exclude toxin.
5) Soften wrinkle temporarily.
6) It can accelerate blood circumfluence, add water to cell, and improve the metabolism and self-regeneration of skin cell.
7) With aromatherapy treatment, stimulating the partial nerve and nursing the physical function in effective way.

●Specifications and Technical Data:

Product Name	**Elite Digital Facial Ozone Steamer**
Item No.	**SKU17595**
Function	Ion Facial Steamer
Rated Voltage/Power	AC. 110-130V/750W\ AC. 220-240V/800W
Working Frequency	50/60HZ
Dimension	1100*390*280mm
N.W	5.2 KG

●Packing list:

Item	Product Description	QTY
Host machine	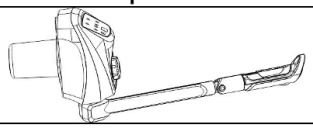	1 SET
Column		1 PCS
Five Feet Standing	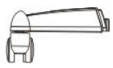	5 PCS
Five Feet Base		1PCS
Five Feet Plat Broad		1PCS
M10 screws	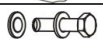	1GROUP
Wrench		1 PCS
Essence cotton		2 PCS
fixing sleeve		1 PCS
User Instruction		1 SET

●Steamer Structure Description

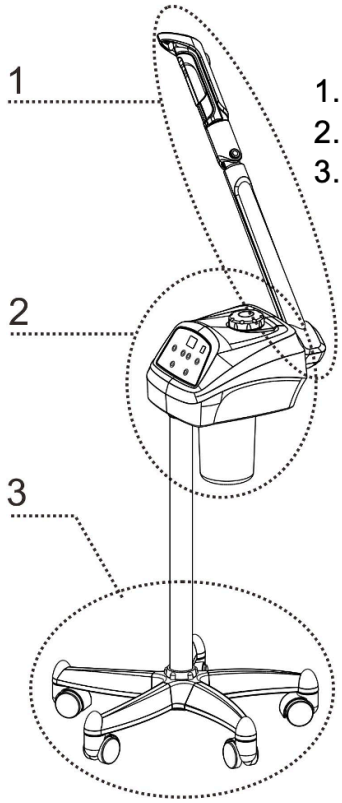

1. Spray Arm Groups
2. Host machine
3. Standing

●Spray Arm Groups

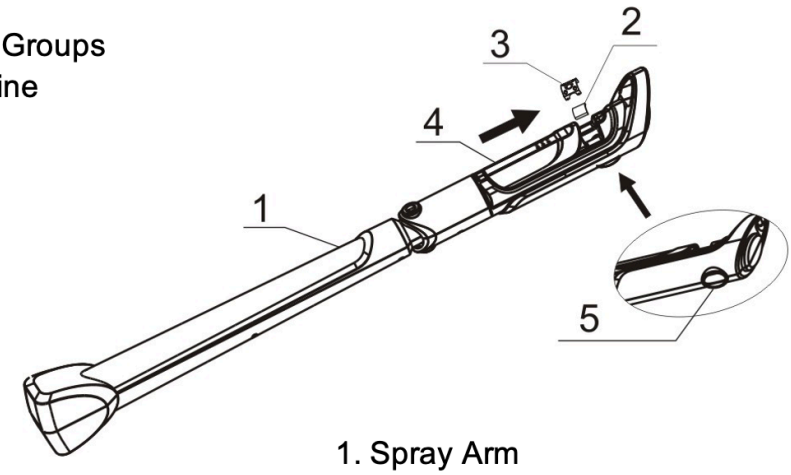

1. Spray Arm
2. Essence oil Cotton
3. Essence support
4. Essence sliding Cover
5. Steam Outlet

•Host machine Description

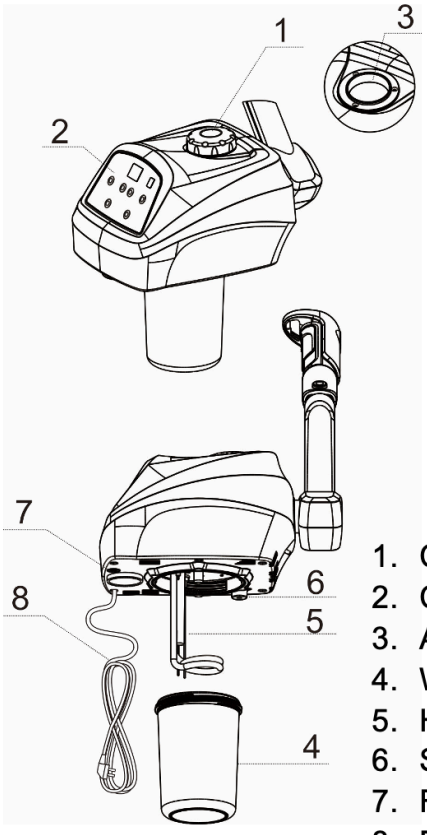

1. Cover
2. Control Panel
3. Atomization room
4. Water Cup
5. Heating Pipe
6. Starter
7. Fuse base
8. Power Cord

●Standing Description

1. Column
2. Five Feet Base
3. Five Feet standing
4. Five feet plat board
5. Ø10 Spring Lamination
6. Ø10 Flat Shim
7. M10 Bolt
8. fixing sleeve

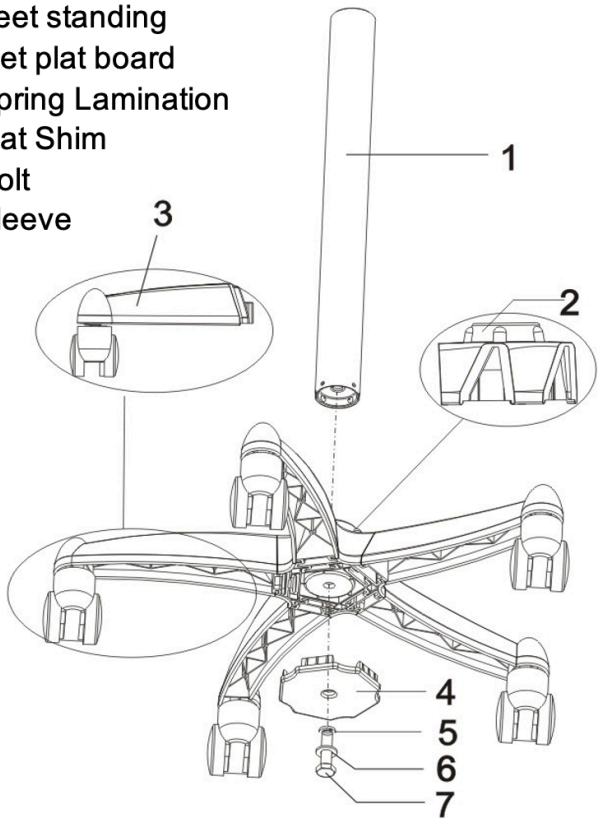

●Assembly Instruction：

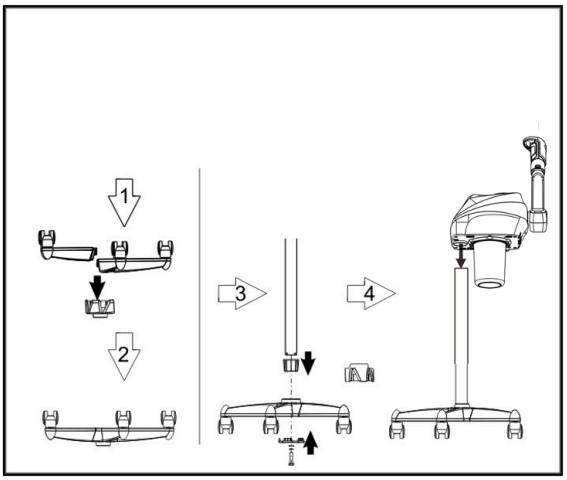

Step 1: Press the five feet cover to the five feet base；

Step 2、3： Set the column combine with the fixing sleeve in the five feet base; Fix the five feet plat board on the five feet; Put the flat shim and spring lamination to the M10 Screws, and then fix the five feet plat board and the five feet to the column by the M10 screws.

Step 4: Put the host machine in the column.

●Panel Description:

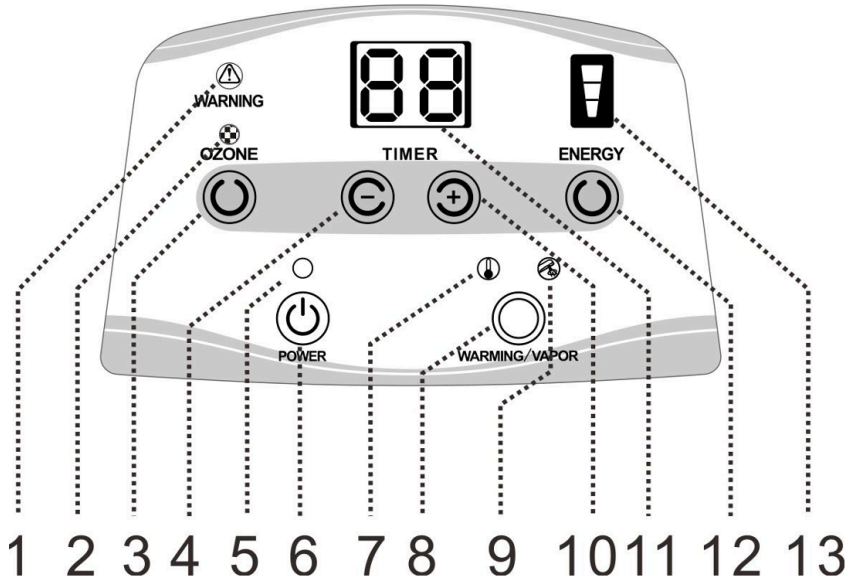

1. High/Low Water Warning Indicator Light
2. Ozone Working Indicator Light
3. Ozone Power Switch
4. Time Decreasing Key
5. Power Indicator Light
6. Power Switch
7. Warming Working Indicator Light
8. Warming or Hot Vapor turn on Key
9. Hot Vapor Working Indicator Light
10. Time Increasing Key
11. Time Display window
12. Energy Selection Key
13. Energy Display Window

●Usage Instruction

1、 Spray arm unlock：

when take out the whole machine from the packing, the spray arm was locked in fixed position. Please pull out the limited lock with one hand (as direction of the black arrow in the picture), rotate the spray arm to horizontal position with the other hand (as following picture），release the limited lock for spray arm to finish the spray arm unlock. Before application, please confirm unlock of the spray arm and adjust it around to 130 degrees.

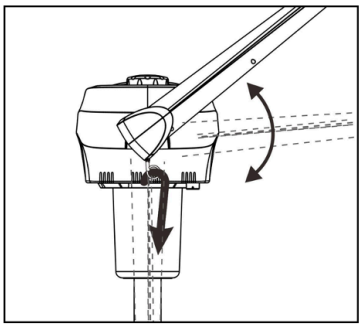

2、 Spray arm and spray head setting：

Spray arm with special design. It can adjust by different angle to fit different environment. As the follow picture:

1. 130 degree can be adjusted by left-right direction.

2. 60 degree can be adjusted by forward-backward direction.
3. Spray head can be rotated 360 degree.
4. Spray arm only can be used within defined limits. It will spray water or damage component if out of limit adjustment forcibly which won't be covered under warranty.

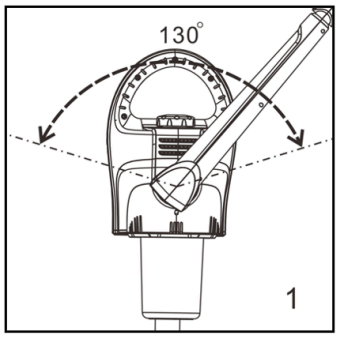

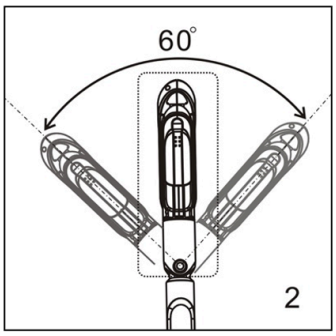

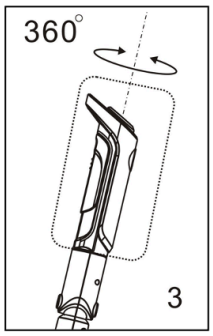

5. Please don't adjust the arm too hard or it will damage inside joints of the spray arm.

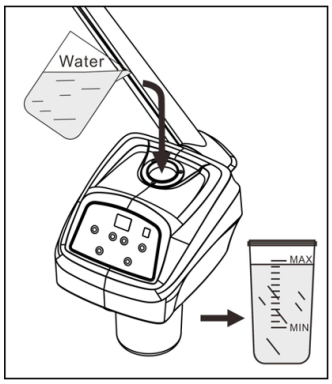

3、 Put water into the cup:

Put water into the cup after open the herbal medicine cover.
The water level should be between the highest and lowest of the water scale marks (As picture shown).

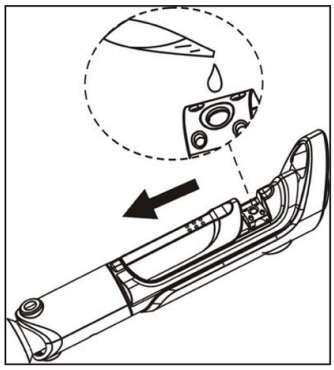

4、 Adding essence oil：

If there's need essential oil spray therapy, open the essential oil sliding cover on the top of the nozzle, and use burette drop essential oil into the cotton pallet (one or two drops of essential oil are enough). (As right picture shown) If it needs to change the essential oil, take away the essential oil base with tweezer and change the cotton. Reset it and add new essence oil.

5、 Water cup installation and removal：

Cut off the power before removing the water cup. Please water cup cold and then take it apart. Holding the host machine in one hand and rotate clockwise by holding the bottom of the cup in another hand.

Vice versa, cut off the power before install the water cup. Holding the host machine in one hand and rotate counterclockwise by holding the bottom of the cup in another hand. (As picture shown)

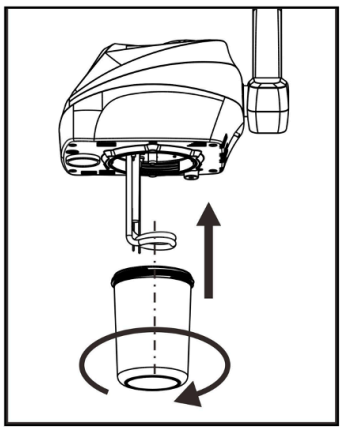

Control panel operation：

1.Plug the power plug.

2. "○"power indicator lights on of the power key "⏻" when turn on the power key "⏻", motor goes on standby status.

—Time window displays "15" minutes.

—“”on the energy window shown the largest gear.

—Ozone working status indicator light “”on the “”ozone switch is off.

—Spray working status indicator light “”or””on the “” WARMING/VAPOR switch is off.

3.Turn on the hot spray key” WARMING/VAPOR ” switch

—Turn on the “WARMING/VAPOR “switch, spray working status indicator light “”on the “”lights. Currently, the host begins heating, steam spouts from the nozzle around six minutes.

—Turn on the “WARMING/VAPOR “switch, WARMING working status indicator light “”on the “”lights. Currently, the host begins heating.

4. Time setting

Press key “” and “” for TIMER" to set up the working time according needed.

When spray working status indicator light “” , time range 1~30 min, default 15 min.

When Warming working status indicator light “” , time range 1~90 min, default 30 min.

5. Energy setting

Press “ENERGY”to select the output of the mist, there are high, middle and low mist for selection; the “” display window lights full mean the highest energy, contrary means the lowest energy. Before the mist spouts should be selected the highest level in using, then adjust the mist according needed.

6. Turn on the ozone function

Press the ozone switch “”, the ozone working status indicator light “”is on; Currently, ozone pipe turns on, obviously ozone smells in the steam with distinct atomization phenomenon.

7. Water level detection function

The host machine detects the water level automatically when heating “” or “” , when the water level under the normal working (water level between the maximum and minimum), the host machine will continuously be heating.

When too high or too low water level is detected, (when the water level was too high, the time display window will display "E2”, when the water level too low, the time display window will display "E1", the host machine turn off the heating right away.

Currently, the indicator light “” or “” on “**WARMING/VAPOR**” key is off. the buzzer will give the alarm signal "**De**" Continuously until the water level reach the normal water lever., and unlock the all the locked button, at this time, press the " **WARMING/VAPOR**" to rework

●Attention:

1. Before turning on the power of the host machine, please confirm the water cup was screwed down, the water level was between the highest and lowest water level mark and the water-in cover if tighten.
2. If there’s needed to add essential oil under working condition, pleas all it after pause the mist spray.
3. It must be clean the cotton pallet in the essential oil base after stop using aromatherapy spray everyday.
4. It must wait the mist came out from the spray hole steady and well-proportionally before facial spray.
5. The spray hole is 40cm away from customer’s face and spray steam should be from customer’s chin to whole face proportionally to avoid scald the customer’s face due to hot spray steam.
6. Ozone has sterilization effect, but it also will harm skin and destroy nutrients of herbal, so it’s important to select suitable time for different skin type when using.

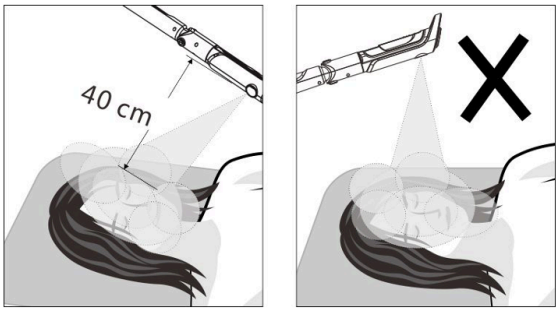

7. Do not adjust the spray arm overexertion to avoid damage joints inside the spray arm.
8. It’s not allowed to take water cup apart when just finish using spray otherwise will cause scald. Please wait water cup cold then take it apart.
9. It’s necessary to avoid over adding water, otherwise it’s not only made bad effect to the host machine but also may cause the problem of leakage of electricity.
10. If there’re problems of water leakage and gas leakage happen underneath the host machine or at the herbal medicine cover, remember cut off the power of host machine first and then check whether the water cup or herbal medicine cover well assembled. If the problems still don’t be solved, please contact local agency for further solution.
11. It should have good ground connection for the power plug of host machine.
12. Pay attention to the water level of the water cup frequently when operation.

●Warning!

1. It’s forbidden to put oily material into water cup or herbal net; it may cause the problem of water spray.
2. it’s forbid to use tap water or water with much impurities. We suggest to use purified water, distilled water or filtered water, otherwise, it will cause detection failure and false positives。
3. It’s not allowed spray from the above of the face by the steam hole, otherwise may causing scald.
4. It’s not allowed to take the water cup apart under machine is spray.
5. It’s not allowed to put this machine in the over humidity environment to work, for example: bathroom etc.

6. It’s not allowed working under projective sunshine, otherwise will cause many kind of unsteady conditions.
7. If there’s any exceptional problem, please contact the agency to let professional maintainer to repair instead of opening the host machine cover to repair by you.
8. If power cord is destroyed, it’s better to choose the accessories from the original factory. It’s not allowed to repair by un-professional personnel; you should go to appointed repair agency to change.

●Maintenance

--Change the clean water before using every day. Clean the water cup thoroughly when finish operating and avoid the accumulation of grease and other residue.

-- Clean heating groups one time every week. (Tips: Mix some acetic acid or citric acid with water to the water cup for washing, after heating for 10 minute then using clean water to wash heating tube.)

-- Pay attention to the water level of the water cup frequently.

-- Cleaning the machine after using, avoid accumulation by beauty leftover.

Disclaimer

This manual shall only be used for the reference of operation of this particular model. If the manual is used for other purposes, we will not undertake any according consequences and responsibility.

All information of this manual shall be protected by copyright and shall not be copied and translated in any part of this specification without the written consent of manufacturer.

Equipment Features

This series are composed of metal shell , stainless steel base, fashionable plastic water cup, copper spray pipe and so forth. Therefore, it is featured with solid structure, durability and good shape. The special stainless steel base guarantees the stability and safety in high temperature, and it will not result in oxidation or re-composition in high temperature, so as to avoid some oxidized and heavy metal atoms from some traditional material in high temperature when they are at work, to harm the skin. Hence, it can guarantee the requirement for cleanness of vapor in beauty treatment.

The spray head can rotate at various angles, which make the operation more easily.
Apart from the basic herbs function, it is also equipped with time pre-set, five levels spray adjustment, and an automatic water level detection.
Besides, it also equipped with maximum and minimum water level alarming system, so as to prevent the damage for heater parts when the water level is too low, or prevent the users from opening the steamer due to their carelessness when there is no water in the water cup.

Warning

- Please make sure the power line is cut off when there is no water or a lack of water. To avoid any danger, disconnect the power when the water level is low. Otherwise, the users should take full responsibility if there is any accident.
- Please read the detailed instructions carefully or operate the instrument with the help of professional technicians.
- Children shall not use this instrument and get close to or play this instrument within an hour after the instrument stop operating.
- Since this instrument works with high temperature, keep an eye on the instrument when it is working to prevent any accidents or fire.
- Do not use any greasy elements into the water container or the herbs filter mesh, otherwise, water may spray out.
- Do not spray vapor directly down to the client's face two closely, or it will cause scald.
- Do not use the steamer under humid environment, like bathroom, etc.
- Do not use the steamer under the sun for long time, otherwise, it will cause some instabilities.
- Do not conduct electricity between probes directly, or it will lead to elements damages.
- Do not open up the machine by oneself. If there is anything unusual, please consult the sales agent.