Digital Katana Facial Steamer With Aroma Therapy (SKU23180)



SKIN+ACT

Toll Free: 1.800.418.0830	www.skinact.com www.spaandequipment.com	International: 818.834.6640

Copyright © 2026 Spa and Equipment, All Rights Reserved

NOTICE

No part of this document may be photocopied, reproduced, or translated into any other language without prior written consent of Spa and Equipment/SkinAct.

The information in this document is subject to change without notice at any time and should not be construed as a commitment by Spa and Equipment/SkinAct.

Spa and Equipment/SkinAct assumes no responsibility for any errors that may be in this document, nor does it make expressed or implied warranty with regard to this material, including, but not limited to, the implied warranties of merchantability and fitness for a particular purpose.

Spa and Equipment/SkinAct shall not be liable for incidental or consequential damages arising out of the furnishing, performance, or use of this document and the program material which it describes.

SKIN+ACT

This manual is intended solely as a reference for the operation of this specific model. The manufacturer assumes no responsibility for any consequences resulting from improper use or use beyond the intended purpose.

All information contained in this manual is protected by copyright. No part of this document may be copied, reproduced, or translated without the written consent of the manufacturer.

FEATURES

This unit features a durable metal housing, stainless steel base, stylish glass water cup, copper spray pipe, and soft hose. The solid structure ensures long-lasting durability and an elegant appearance.

The specially designed stainless steel base provides stability and safety during high-temperature operation. It does not oxidize or corrode under heat, preventing the release of harmful heavy metal particles that may be present in traditional materials. This ensures clean and safe steam for beauty treatments.

The spray head can rotate at multiple angles for convenient and flexible operation. In addition to the basic herbal steaming function, the unit includes:

- Preset timer settings
- Five adjustable steam intensity levels
- Automatic water level detection system

It is also equipped with maximum and minimum water level alarms to prevent damage when the water level is too low and to prevent operation when no water is present in the glass cup.

FUNCTIONS

1. Loosens necrotic (dead) skin cells to prepare for subsequent treatments.

2. Opens skin pores for deep cleansing.

3. Penetrates pores to soften and remove grease, blackheads, makeup residue, and dirt.

4. Helps pores release toxins.

5. Temporarily softens fine lines and wrinkles.

6. Stimulates blood circulation, hydrates skin cells, improves metabolism, and promotes skin renewal.

7. Assists in treating acne, reducing stains, whitening, and nourishing the skin when used with appropriate herbal solutions.

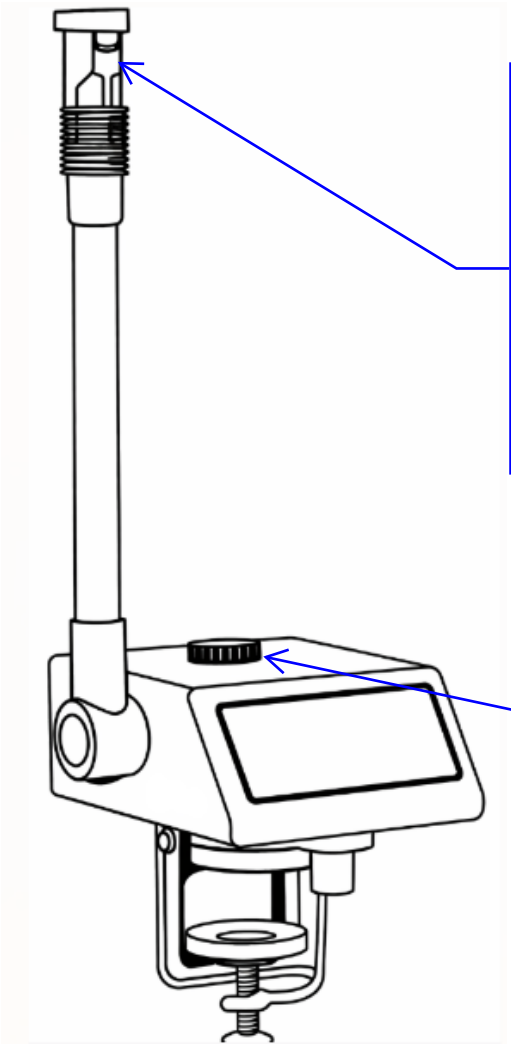

⚠ WARNING
To Prevent Facial Burns:

• Maintain a safe distance between the spray nozzle and the face.

• Do not spray continuously on the same area for an extended period.

• Do not hold the spray nozzle perpendicular to the face.

• Always adjust the angle appropriately during use.

Machine Safety:

• Use distilled water only. Do not use essential oils or other additives directly in the water tank.

• When using with herbal filters or herbal bags, remove solid herbal residue before filling with water to avoid blockage.

• Do not remove the cover while the machine is heating or producing steam.

• Do not operate the machine without water.

PARTS DESCRIPTION AND INSTALLATION

Product Components

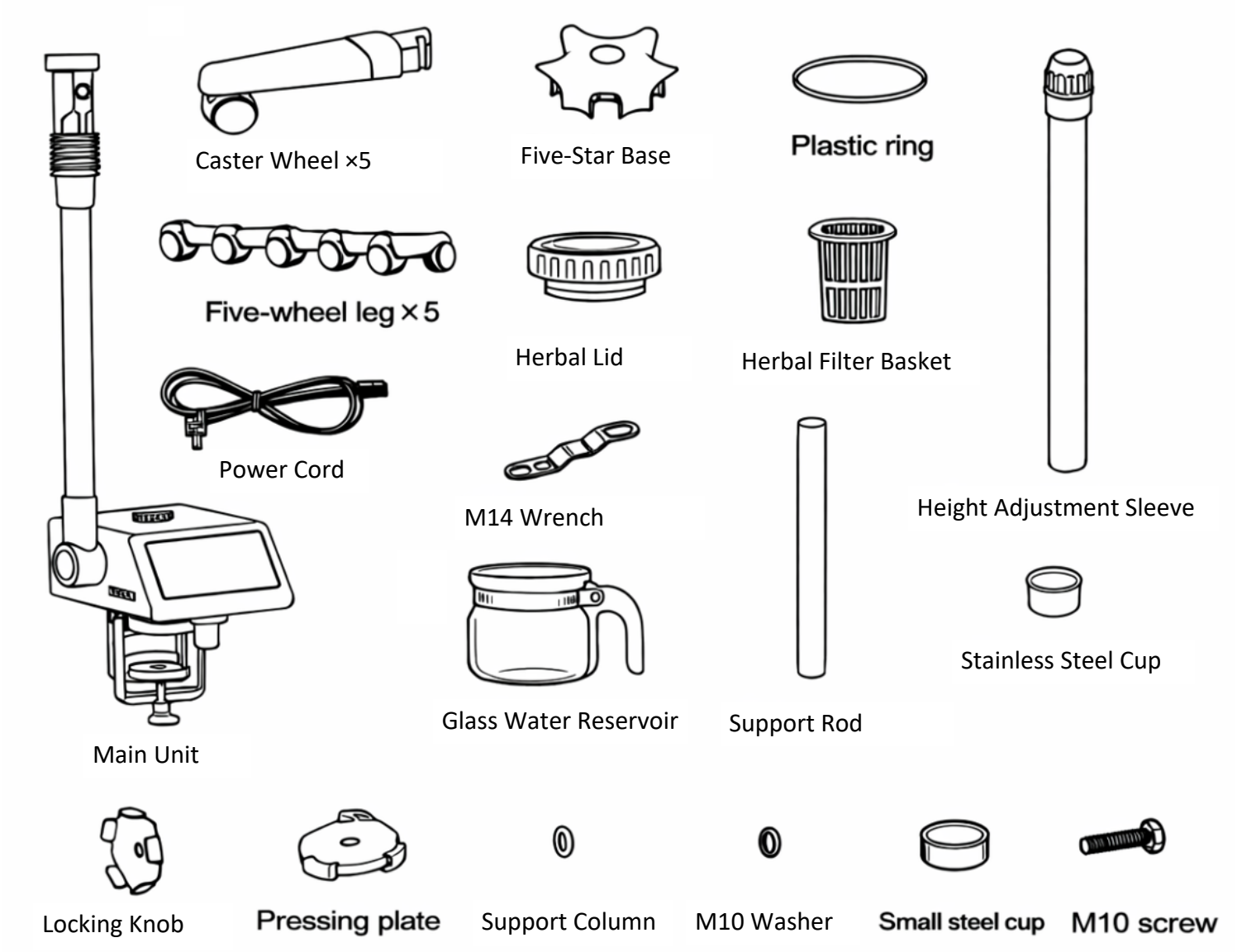

BASE INSTALLATION FOR SINGLE-FUNCTION STEAMER

Step 1: Assemble the Base

1.Attach the five caster wheels to the five-star base.

2.Insert the support column into the center of the base.

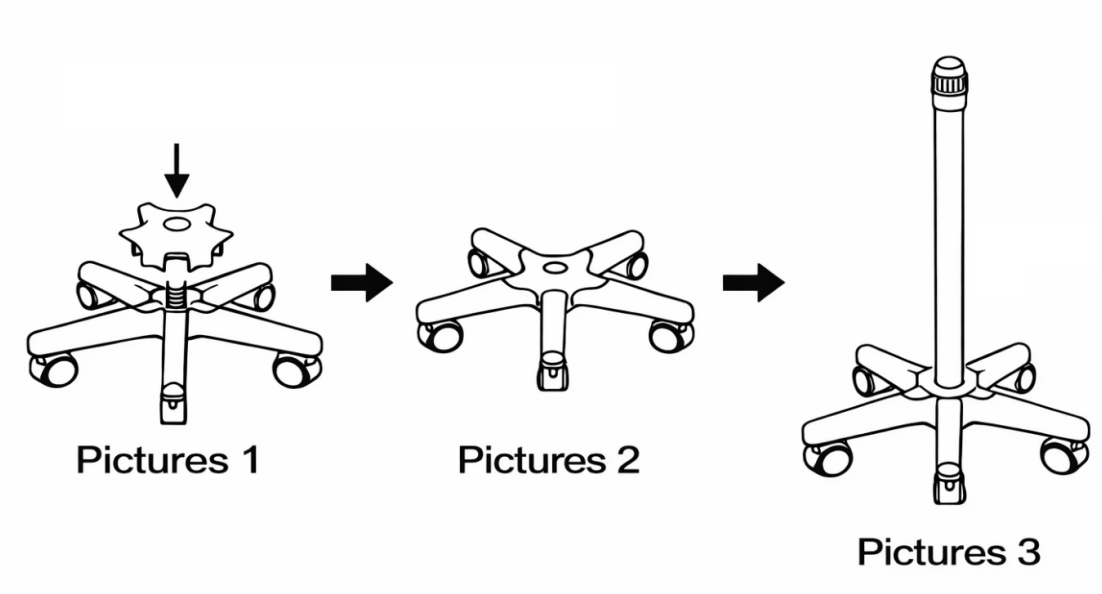

Step 2: Secure the Base

Insert the M10 bolt (with washer and locking knob pre-assembled) into the bottom of the support column and tighten it securely.

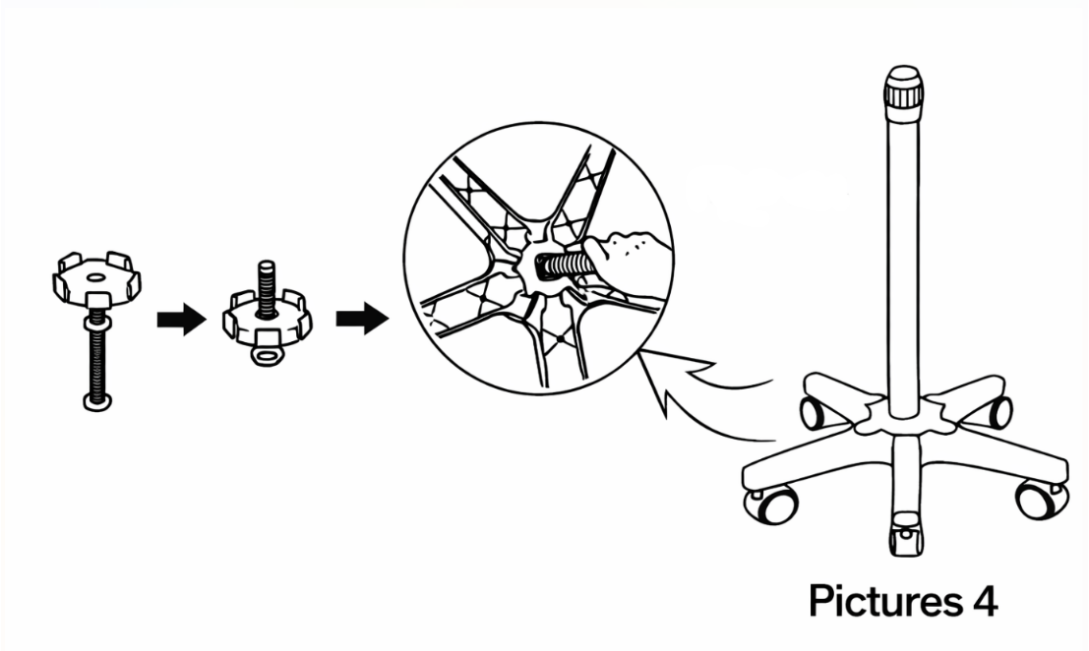

Step 3: Install the Height Adjustment Components

1. Loosen the height adjustment sleeve.

2. Insert the support rod into the support column.

3. Push it down to the lowest position (as shown in Figure 9, if applicable).

4. Adjust to the desired height.

5. Tighten the sleeve firmly to secure it in place.

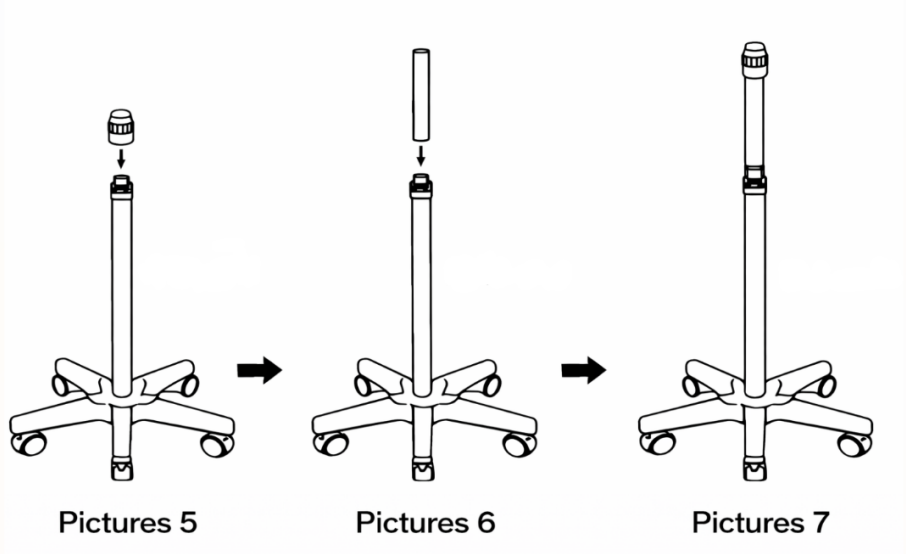

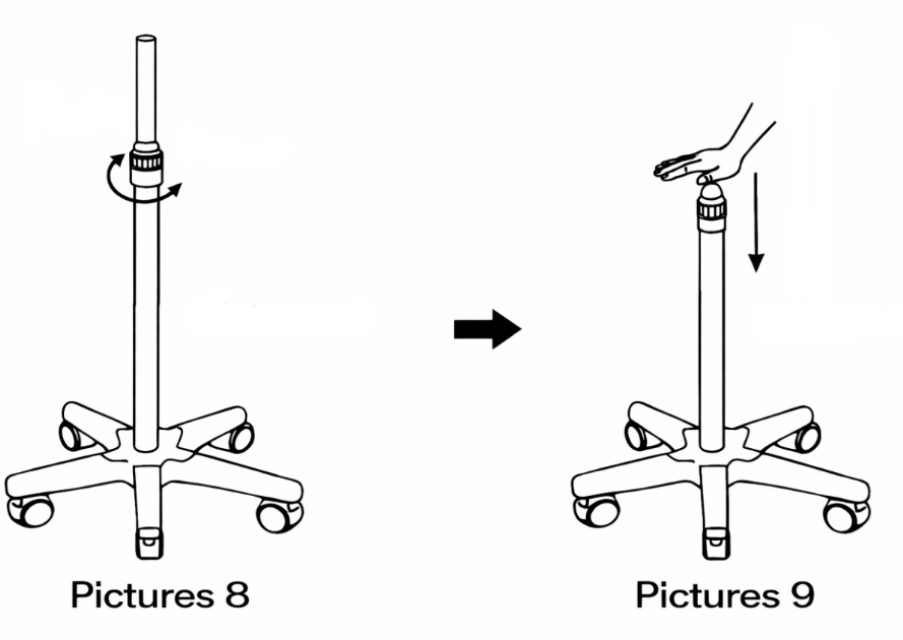

⚠ WARNING

When adjusting the height of the support rod:

• Hold the support rod firmly with one hand.

• Use the other hand to loosen or tighten the height adjustment sleeve.

• Do not point the nozzle end toward yourself or others.
The rod may spring upward when loosened and may cause injury.

WATER RESERVOIR INSTALLATION

1. Place the plastic support ring onto the glass water reservoir.

2. Position the reservoir tray to a suitable location that supports the reservoir.

3. Push the tray backward.

4. Insert the glass water reservoir into the main unit.

5. Push the tray back fully and tighten it securely.

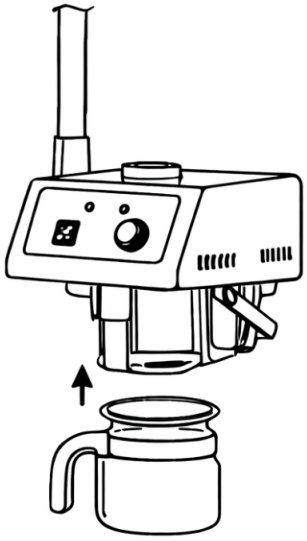

Pictures 1

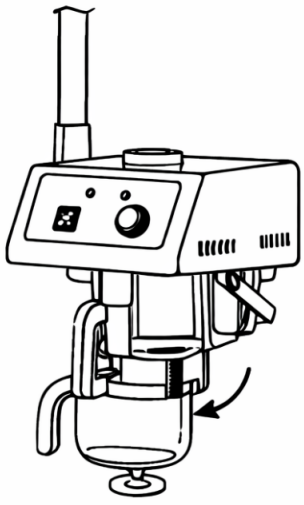

Pictures 2

⚠ **WARNING**

The glass water reservoir is designed specifically for this steamer model.
Do not use other similar water cups or containers, as they may leak water or steam and could cause malfunction or injury.

INSTALLATION (COMPLETE FACIAL STEAMER)

Attach the main unit to the support rod and tighten securely.

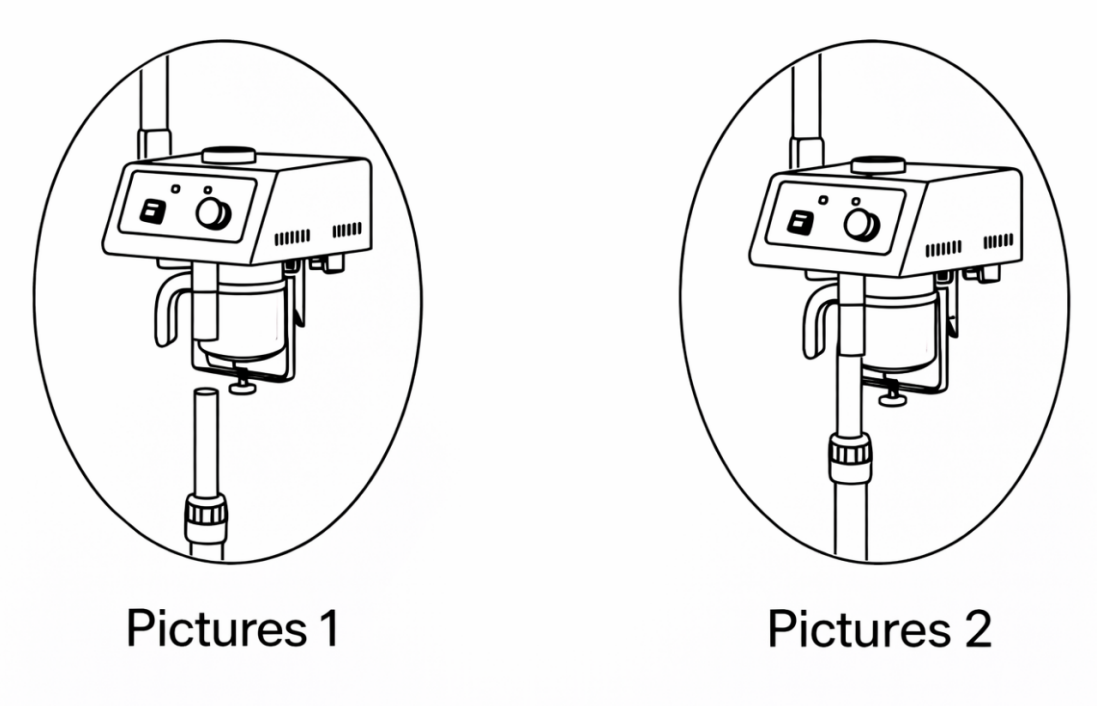

Pictures 1

Pictures 2

OPERATION PANEL

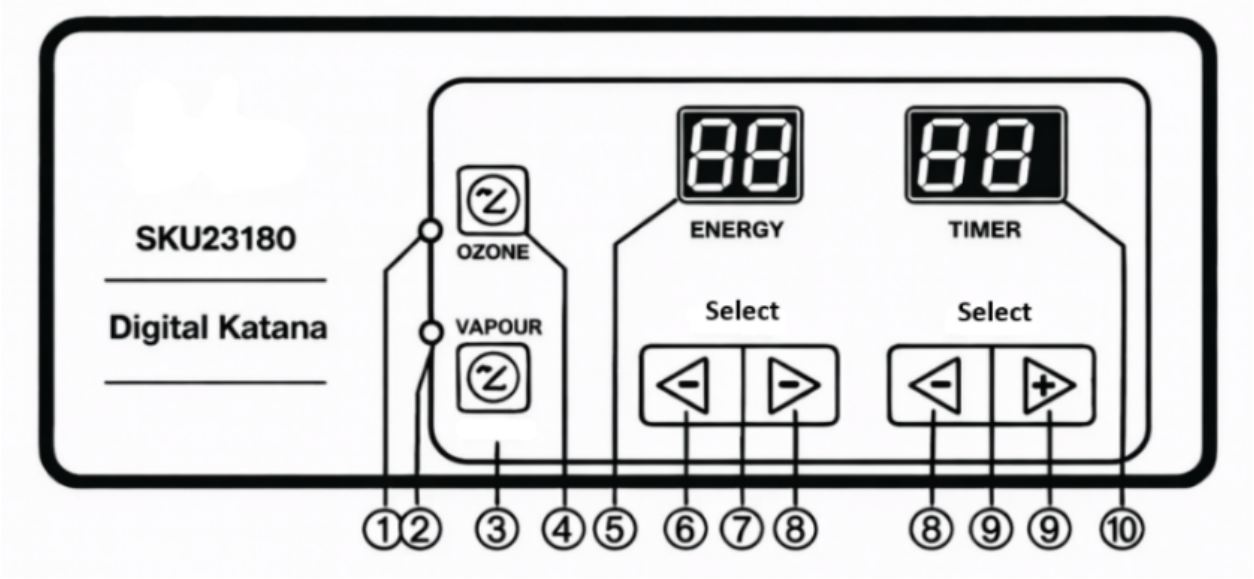

① Ozone indicator light
② Heater indicator light
③ Spray ON/OFF
④ Ozone ON/OFF
⑤ Energy
⑥ Energy decreasing button
⑦ Energy increasing button
⑧ Time decreasing button
⑨ Time increasing button
⑩ Time increasing button

(1) FILLING THE WATER RESERVOIR

1. Place the glass water reservoir onto the reservoir tray and tighten the fixing screw.

2. Remove the herbal lid.

3. Pour distilled water into the reservoir.

4. Make sure the water level stays between the MIN and MAX marks.

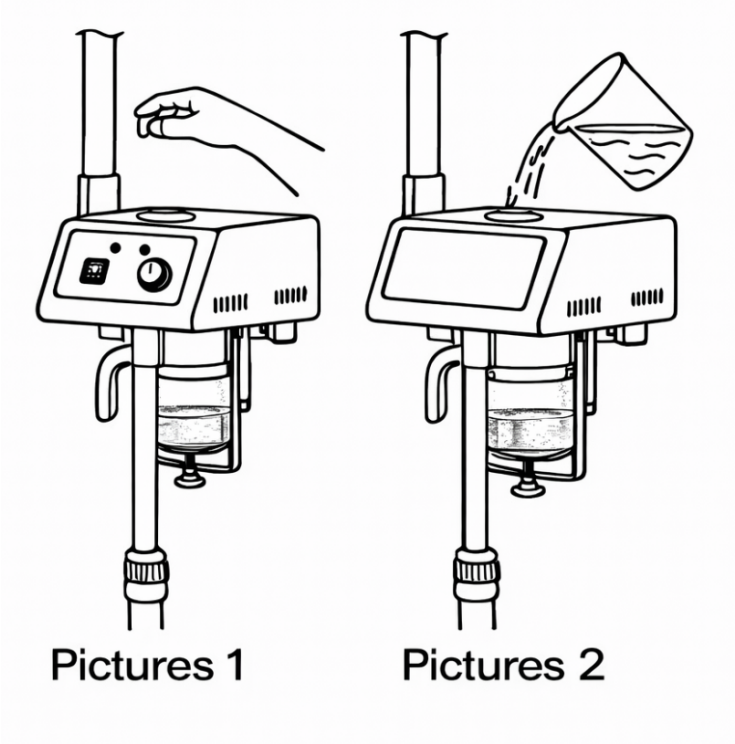

Pictures 1 Pictures 2

(2) USING HERBS

1. Remove the herbal filter basket.

2. Place the herbal bag into the stainless steel cup.

3. Reinstall the filter basket and place the lid back on.

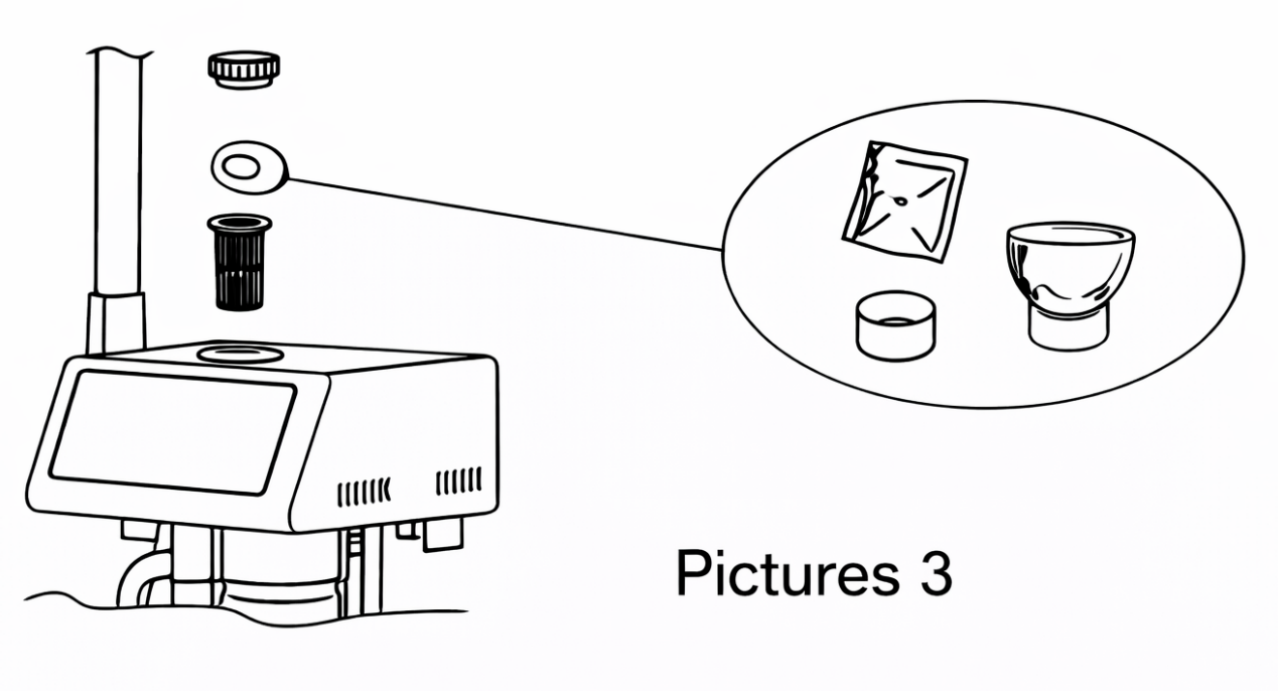

Pictures 3

(3) FRAGRANCE / ESSENTIAL OIL USE (OPTIONAL)

For fragrance treatment, add a few drops of essential oil into the aroma cup on the spray head. The spray head can be adjusted to the desired angle

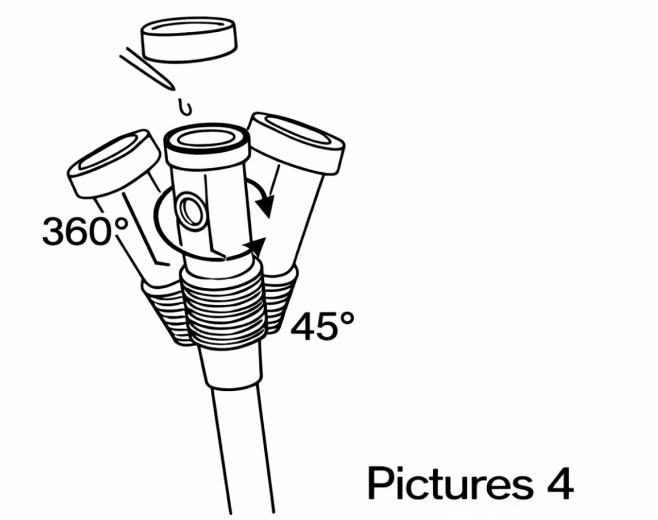

Pictures 4

(4) CONNECT POWER

Plug the power cord into a suitable electrical outlet.

(5) AUTOMATIC INSPECTION FUNCTION

After powering on the unit:

Press VAPOR.
• The green indicator light will turn on.
• The timer will display 15 minutes (default setting).
• The energy display will show 0.

The unit will automatically check the water level:
• If the water level is between MIN and MAX, the unit will enter standby mode.
• If the water level is below MIN, the unit will beep and lock all buttons except VAPOR.

(6) FIVE-LEVEL SPRAY OUTPUT

Use the "+" or "–" buttons under ENERGY to adjust the steam output from 0 to 5.
Level 5 provides the maximum steam output.

For faster steam production, we recommend starting at Level 5, then adjusting to the desired level once steam is produced.

(7) TIMER SETTING

Use the "+" or "–" buttons under TIMER to set the operating time from 0 to 99 minutes.
The default time is 15 minutes when the unit is powered on.

(8) OZONE FUNCTION (BACTERIA REDUCTION)

Press the OZONE button.

- The green ozone indicator light will turn on.
- The ozone generator will begin operating.
- A slight ozone odor may be noticed in the steam.

(9) LOW-WATER PROTECTION

During operation, if the water level drops below MIN:

- The unit will automatically stop heating.
- All buttons will lock (except VAPOR).
- An alarm will sound continuously.

Refill the reservoir to a normal level, then press the appropriate button to resume operation.

(10) AUTO SHUT-OFF

When the preset time ends:

- The unit will automatically turn off the VAPOR function.
- The buzzer will sound 5 times.
- The timer will reset to 15 minutes.
- The unit will return to standby mode.

CAUTIONS

1. Adjusting height: When adjusting the height, hold the support rod firmly with one hand and turn the height adjustment sleeve with the other. Do not point the nozzle toward yourself or others. The rod may spring upward when loosened.

2. Burn protector: The protector helps prevent burns from accidental contact with the stainless steel cup during operation. Do not remove it. If the protector is damaged, reinstall or replace it before use.

3. Reservoir placement: Install the glass water reservoir correctly. Make sure the rubber sealing ring is properly positioned to prevent steam or water leakage.

4. Water level: During operation, keep the water level between the MIN and MAX marks.

5. Refilling water: When adding water, avoid spilling water onto the machine. Spilled water may cause electrical leakage or malfunction.

6. If leakage occurs: If water or steam leakage occurs during operation, turn POWER OFF immediately and unplug the unit. Remove the reservoir and check whether the rubber sealing ring is installed correctly, then reinstall. If the issue continues, contact service support.

7. Safe spraying distance: Do not aim the nozzle directly at the face until the steam output is steady and even. Maintain a distance of at least 40 cm (16 in). Test the steam on your hand first, then begin facial steaming.

8. Ozone usage (time limit): Do not use the ozone function for extended periods. Excessive ozone exposure may irritate the skin and reduce skin moisture. Recommended ozone time depends on skin type (see table below).

9. Low-water protection: If the water level drops below MIN, the unit will automatically stop heating and sound an alarm. Controls may lock (except VAPOR). Refill water to a normal level, then press the key again to resume operation.

10. Overheat protection: The internal temperature controller may temporarily shut off power to protect the unit from overheating. Add water if needed and allow the unit to cool before continuing.

RECOMMENDED SPRAY DISTANCE & TIME

Because skin types vary, use the following guidelines:

Skin Type (Reference)	Recommended Distance	Recommended Time
Oily skin / poor circulation	35–40 cm	About 15 min
Normal skin	35–40 cm	About 10 min
Sensitive or dry skin	40–45 cm	About 5 min
Capillary dilation / UV irritation	40 cm	About 5 min

WARNING

• Do not put oily/greasy substances into the glass water reservoir or the herbal filter basket. This may cause hot water or steam to spray out.

• Do not direct steam toward the face at close range. Keep a safe distance to prevent burns.

• Do not use the steamer in high-humidity environments (for example, bathrooms).

• Do not leave the unit in direct sunlight for long periods. This may cause instability or damage.

• Do not attempt to conduct electricity between probes/terminals or short any components. This may damage the unit.

• Do not disassemble or repair the machine yourself. If anything is abnormal, contact the dealer or qualified service personnel.

• If the power cord is damaged, stop using the unit immediately and have it replaced by qualified service personnel.

• Turn POWER OFF and unplug the unit when there is no water or insufficient water in the reservoir to avoid danger.

• Do not power on the unit if the water level is abnormal. The user is responsible for improper use.

• Read and follow all instructions carefully. If needed, operate the unit with guidance from qualified technicians.

• Keep children away from the unit. Do not allow children to use or play with this appliance.

• This appliance operates at high temperature. Never leave it unattended while in use to prevent accidents or fire.

MAINTENANCE

• Remove mineral scale from the glass water reservoir and heating area at least once per week (more often in hard-water areas).

• For descaling, use a mild solution such as citric acid or diluted vinegar (about 7% acetic acid), then rinse thoroughly with clean water.

• After each use, wipe the unit clean and remove any residue.

• During use, always monitor the water level and refill when needed (do not operate without water).

Katana Facial Steamer – Quick Troubleshooting Q&A

Q: Why is my steamer not turning on or producing steam?A: Check these in order:
1. Is it plugged directly into a grounded 110–120V wall outlet that can handle 650W (no extension cords or power strips—use a dedicated 15-amp circuit for safety and performance)?
2. Is the water tank/beaker filled with distilled water between the min and max lines?
3. Has it had 5–10 minutes to heat up after turning on?
4. Is the timer set and the power/steam switch activated? Power cycle if needed: unplug for 5 minutes, refill/check water, plug back in.

Q: Why does the unit shut off by itself during use?A: The Katana has built-in automatic safety shut-off protections that activate if:
• Water level drops below the minimum (dry-boil protection)
• Water exceeds the maximum level (overfill protection)
• Internal overheating is detected
• Timer reaches the end
• The unit is moved or tilted while operating—water can shift and temporarily trigger the maximum level sensor.Solution: Turn off, let it cool/stabilize for 10–15 minutes (important for safety), check that water is exactly between min and max lines, place on a stable flat surface, then restart.

Q: Steam is weak, inconsistent, or stops after a few minutes.A: Most common causes:
• Using tap water instead of distilled → mineral scale buildup
• Water level too low or too high
• Nozzle partially clogged Fix: Always use distilled water only. Descale monthly by running a 1:3 white vinegar + distilled water mix through it. Clean the nozzle gently with a soft brush or cloth.

Q: Can I add essential oils to the water tank?A: No—never add oils, herbs, or anything else directly to the main water beaker/tank. This can clog the system or damage internals. Use only the designated aromatherapy basket/compartment in the nozzle head: add 2–5 drops of pure essential oil there.

Q: Steam is too hot or uncomfortable for the client.A: Position the nozzle at a 45° angle, at least 12–16 inches (30–40 cm) from the face. Avoid directing steam straight downward or too close to prevent discomfort or burns. Start on lower steam intensity if adjustable, and check in with the client.

Q: How do I clean / descale the steamer?A: 1. Empty remaining water after each use. 2. For descaling: Fill with distilled water + white vinegar (1:3 ratio). Run a full cycle. 3. Rinse thoroughly 2–3 times with plain distilled water. 4. Wipe exterior. Never submerge the base or electrical parts.

Q: Aromatherapy scent is not coming through.A: Ensure:
• Oils are added only to the nozzle aromatherapy compartment (not the water tank)
• Steam/vapor mode is active
• Compartment cap is securely closed Clean the compartment after each use to prevent residue buildup.

Specification

- Heights from ground to top of steamer: 28" - 40"
- Steamer arm length: 24"
- Base diameter: 23"

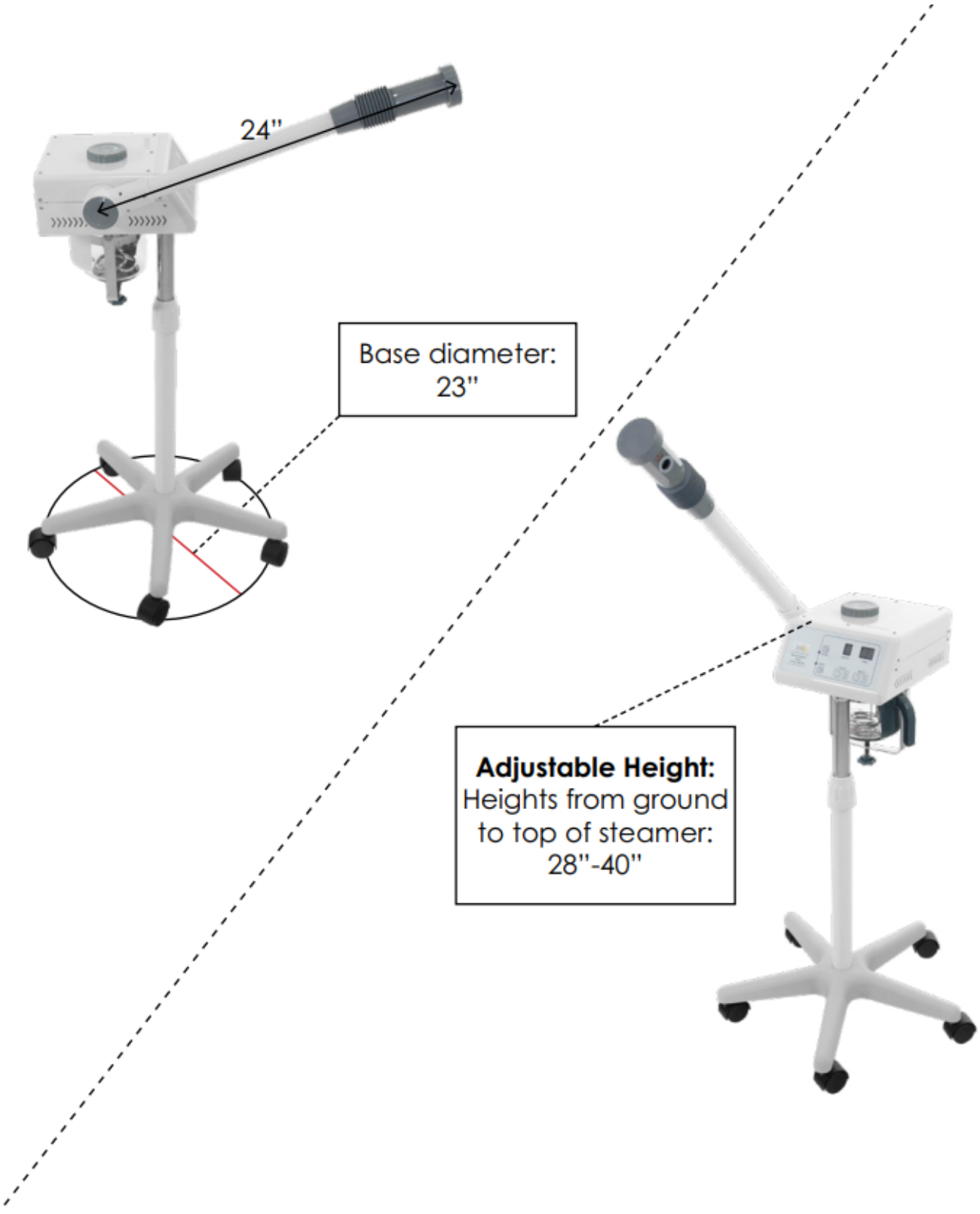

Specification

Voltage	AC 100–120V, 50Hz/60Hz
Wattage	650W
Packing Size	87.5 × 34 × 35 cm
Net Weight	7.5 kg

DISPOSAL INFORMATION

Do not dispose of old or defective appliances with household waste.
Dispose of this product through authorized recycling or public collection points in accordance with local regulations.



NOTICE

- Please review the product specifications before use.
- This manual is provided for reference only.
- Specifications and design are subject to change without prior notice.