# Coda Shampoo Chair Backwash Unit
# Specifications Sheet



SKIN+ACT

| | | |
|---|---|---|
| Toll Free: 1.800.418.0830 | www.skinact.com<br>www.spaandequipment.com | International: 818.834.6640 |

Copyright © 2025 Spa and Equipment, All Rights Reserved

## NOTICE

No part of this document may be photocopied, reproduced, or translated into any other language without prior written consent of Spa and Equipment/SkinAct.

The information in this document is subject to change without notice at any time and should not be construed as a commitment by Spa and Equipment/SkinAct.

Spa and Equipment/SkinAct assumes no responsibility for any errors that may be in this document, nor does it make expressed or implied warranty with regard to this material, including, but not limited to, the implied warranties of merchantability and fitness for a particular purpose.

Spa and Equipment/SkinAct shall not be liable for incidental or consequential damages arising out of the furnishing, performance, or use of this document and the program material which it describes.

SKIN+ACT

# Measurements






# Measurements




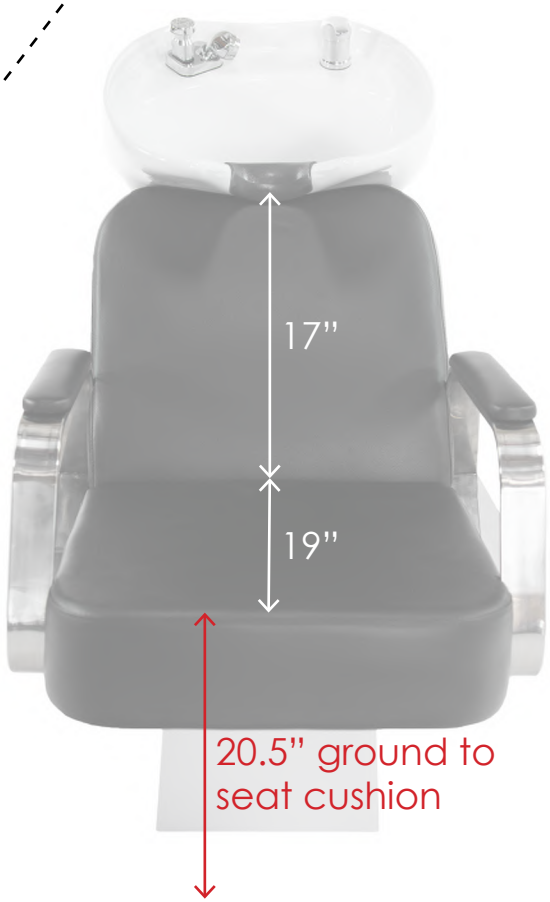



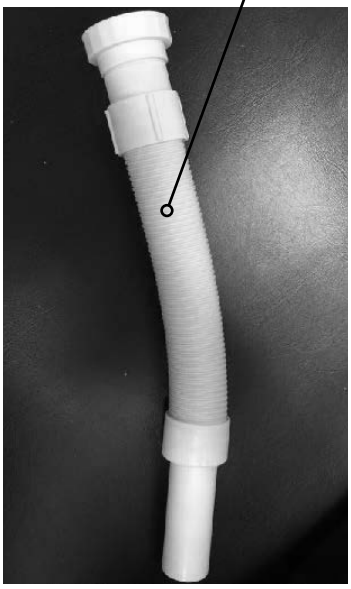

Drain

## Part List

| Drainer Hose<br>1 pc. | Rubber Ring<br>1 pc. | Bowl<br>1 pc. |
|---|---|---|
|  |  |  |
| Water Screen<br>1 pc. | Sprayer Cap<br>1 pc. | Chair<br>1 pc. |
|  |  |  |
| Nut<br>4 pcs. | Screw<br>4 pcs. | |
|  |  | |

## Installation

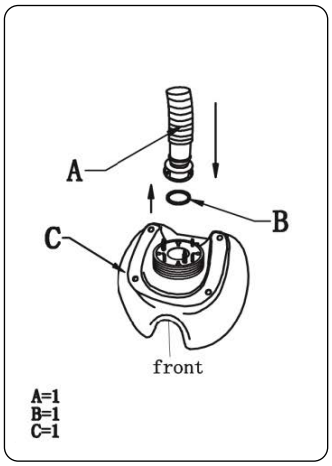


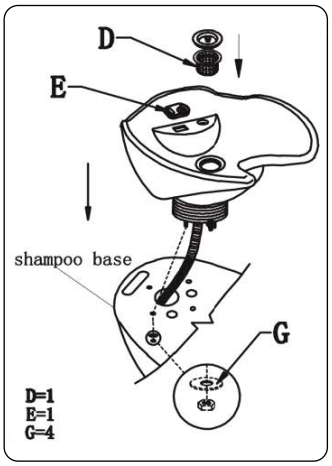


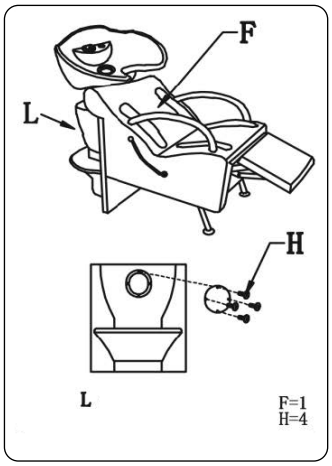


Note: This is a general schematic. Some models may vary.

**Note:**

1. All plumbing needs to be installed, sealed, and assured by a licensed plumber. SkinAct/Spa and Equipment is not responsible for liabilities regarding plumbing, sealing, or maintenance of such equipment.

2. If the shampoo bowl is not aligned with the base, drilling or expansion of the fiberglass may be required.

# Highlights

**Key Features:**

- Tilting porcelain bowl
- Faucet
- Soft spray hose
- Drain plug
- Strainer
- Silicone neck rest
- Arched back for extra support
- Padded arm rests
- Cushions made of high-density foam for extra comfort and longer duration of use

**Detailed Unit Dimensions:**

- Length from back to front: 46”
- Width of the seat: 19.5”
- Width of the seat with arm rests: 24”
- Height from ground to the top of the bowl: 40”
- Height from ground to the top of the seat: 20.5”
- Bowl interior: L = 18” / W = 15”
- CHAIR BASE ONLY Dimensions: L = 33” / W = 21.5”

All shampoo chairs, shampoo bowls, pedicure chairs and equipment that have plumbing need to be installed, sealed, and assured by a licensed plumber. SkinAct/Spa and Equipment is not responsible for liabilities regarding plumbing, sealing, or maintenance of such equipment.

## Installation Requirements

All plumbing-related equipment must be installed by a **licensed plumber**, with **documentation of installation** provided to info@skinact.com within **30 days of delivery**.
Plumbing connections must include **shut-off valves**, **leak detectors**, and **drain pans** as required by local code.
Shampoo units and chairs must be **bolted or secured to the floor** to prevent shifting or stress on plumbing lines. Mobile use of plumbed equipment is **strictly prohibited**

## Shampoo Chair Anchoring & Plumbing Liability

- **Shampoo chairs must be anchored to the floor** to prevent plumbing line stress or failure.
- Do not relocate once plumbed. Movement may cause leaks and void the warranty.

## Lifespan Expectations & Maintenance (Professional Use)

| Component | Expected Lifespan | Required Maintenance |
|---|---|---|
| **Flexible Water Hoses** | 1–2 years (replace annually in high-use) | Inspect quarterly, replace as needed |
| **Drain Fittings & Traps** | 1–3 years | Clean monthly to prevent clogs |
| **Spray Nozzles** | 1–2 years | Clean weekly to prevent mineral buildup |
| **Electric Actuators** | 3–5 years | Keep dust-free, avoid overuse |
| **Ceramic/Porcelain Bowls** | 5–7 years | Avoid harsh chemicals, inspect yearly |

Replacing high-wear parts at regular intervals is required to maintain warranty eligibility. Failure to maintain/replace parts voids coverage.
The customer is solely responsible for verifying that the installation site is **water-resistant**, properly drained, and compliant with **local plumbing codes**.
Any alterations to plumbing lines, hoses, or valves voids all warranties.
Hoses, fittings, and water-contact parts are considered **wearable components** and should be **inspected monthly** and **replaced as needed**, at least **once per year** for professional use.
Failure to install equipment as instructed or maintain it regularly may result in **voiding the warranty** and rejection of damage claims.

## SpaAndEquipment.com does not cover:

- Secondary or consequential damage (e.g., business interruption, replacement of floor coverings, mold remediation, or loss of use)
- Damage resulting from **storing equipment in humid or unventilated areas**, or **before installation without our written storage approval**
- Any water-related claim where proper installation documentation was not submitted as required
- Costs associated with inspection, labor, or third-party evaluations unless authorized in writing by SpaAndEquipment.com

## Maintenance Requirements & Recordkeeping

To ensure the longevity, safety, and performance of your equipment, and to maintain eligibility for warranty coverage, regular maintenance and documentation are required. Failure to maintain the product properly or provide documentation upon request may result in warranty denial.

## Required Maintenance Includes:

Monthly inspections of hoses, fittings, seals, and plumbing connections for signs of wear, corrosion, leaks, or stress.
Annual replacement of all flexible plumbing hoses and connectors used in high-traffic or commercial environments.
Routine cleaning of filters, jets, and water channels to prevent buildup and clogging.
Electrical system inspections (if applicable) to ensure safe operation and code compliance.
Regular draining and flushing of any built-in tanks or water lines, as applicable.
Shampoo units and treatment chairs must be checked to confirm secure floor anchoring and no movement that could affect plumbing integrity.

## Maintenance Log Requirements:

Customers are required to maintain a Maintenance Log, which must include:

- Date of each inspection or service
- Type of service performed
- Name and contact info of the technician or staff member who performed the service
- Any parts replaced (e.g., hoses, seals)
- Photos of work or wear-and-tear (must be emailed to us within 30 days)

## This log must be:

Kept on file for the full duration of the warranty
Available upon request by SpaAndEquipment.com or SkinAct in the event of a warranty claim, damage report, or inspection

## Submission Requirements:

Proof of initial installation by a licensed plumber and/or electrician must be submitted to info@skinact.com within 30 days of product installation. Additional maintenance records may be submitted annually or upon request to maintain active warranty status.